October 15, 2013

Janelle Widmeier
Senior City Planner
City of Minneapolis Planning-Development Services
250 South Fourth Street
Minneapolis MN 55415

Re: The Blackstone, 102 E. 19th Street - Entry Door Replacement

Dear Janelle:

As part of our Certificate of Appropriateness application, the following narrative is submitted.

Background:
The building in question, 102 East 19th Street, is located in the Steven Square Historic District. The proposed scope of work is limited to the replacement of entrance doors and sidelights at three locations; the two entrances on 19th Street and the one entrance on 1st Avenue South.

Without undergoing the required city review process, the original wood entry doors and sidelights were recently replaced. The Owner was then notified by the City that the new doors do not meet with approval. Subsequently, the Owner submitted an application for a Certificate of No Change, proposing that new, re-designed metal doors be installed in accordance with the historic district's Guidelines for Rehabilitation. The application for a Certification of No Change was returned indicating that the proposed alterations require a Certification of Appropriateness.

Response to the Certification of Appropriateness which addresses required findings:
The Owner proposes to remove the doors currently in place and install new doors which are "compatible with the historic character of the building" and are in keeping with the historic district's Guidelines for Rehabilitation. While the guidelines for entrances and porches do not recommend "using a substitute material for the replacement parts that does not convey the visual appearance of the surviving parts of the entrance and porch," they do state that "if the same kind of material is not technically or economically feasible, then a compatible substitute material may be considered."

An exception due to technical infeasibility is requested; specifically, that approval be granted for the new doors to be fabricated from galvanized hollow metal. This is due to the ongoing history of break-ins at this address, which has compromised the personal safety of the building's residents and exposed the Owner to serious liability. Indeed the original wood doors were regularly jimmied open and suffered damage such that they could no longer be repaired and made secure. It is reasonable to assume that new wood doors will be subject to the same abuse. However, once the original wood doors were replaced with metal doors, break-ins and door maintenance ceased to be a problem and resident security was restored.

Response to questions stated in the letter from Janelle Widmeier dated September 11, 2013:
Photographs of the original wood doors and sidelights were carefully examined and the replacement door and sidelights have been designed to replicate the original entrance in size, proportion, profile and detail.

The depth of inset of the proposed doors from the stone door surround will be as original. The original wood trim on the stone surround was not removed when the doors were first replaced. The trim is set back from the outside corner of the stone surround; this dimension will be duplicated.

The width of the muntins will be ¾".

The muntins will be surface applied and affixed to both sides of the glass.

The glass will be clear insulated; the Outdoor Visible Light Reflectance value is 12%.

Sincerely,

Miller Hanson Partners

Kent Simon
Vice President

Stevens Community Apartments Entry Doors Renovation

102 E 19th Street Minneapolis MN, 55403

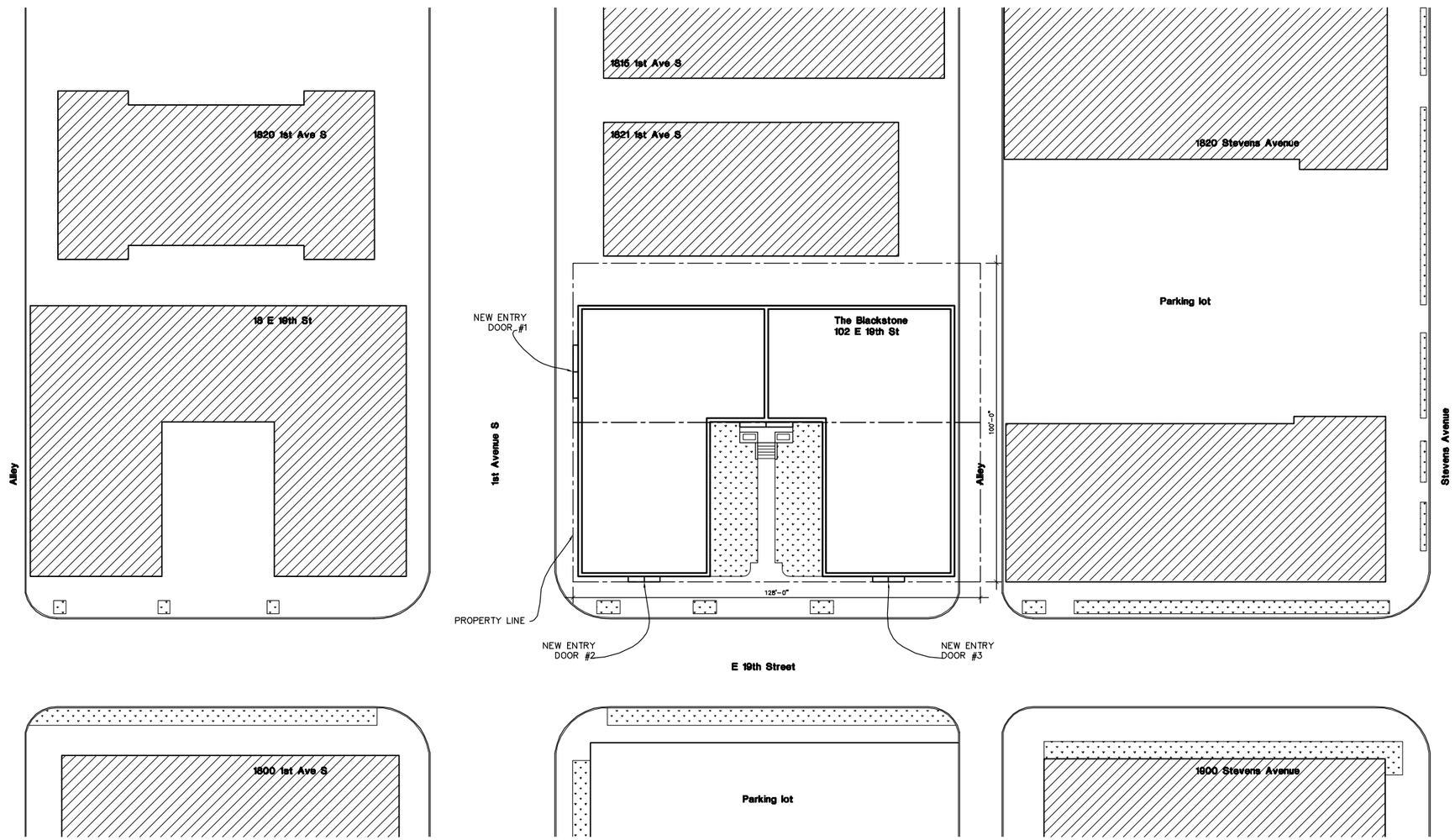

SITE PLAN

1" = 40'-0"

N

ISSUE & REVISION

APPLICATION: 10.17.2013

COMM #1314

DKC PROPERTIES
128 E 19th St, Minneapolis MN 55403

1201 HAWTHORNE AVENUE, SUITE 400
MINNEAPOLIS, MINNESOTA 55403
TEL: 612-332-5420
FAX: 612-332-5425
WWW.MILLERHANSON.COM
MILLER HANSON PARTNERS

I HEREBY CERTIFY THAT THIS PLAN, SPECIFICATION, OR REPORT WAS PREPARED BY ME OR UNDER MY DIRECT SUPERVISION AND THAT I AM A REGISTERED ARCHITECT UNDER THE LAWS OF THE STATE OF MINNESOTA.

Kent Simon

Kent Simon
DATE: XX.XX.20XX
NO. 16380

TITLE SHEET
ENTRY DOOR
ELEVATION

A200

2013 Miller Hanson Partners

Stevens Community Apartments Entry Doors Renovation

102 E 19th Street, Minneapolis MN, 55403

Original Door #1, 1st Avenue S Elevation

NTS

Original Door #2, E 19th Street West Elevation

NTS

Original Door #3, E 19th Street East Elevation

NTS

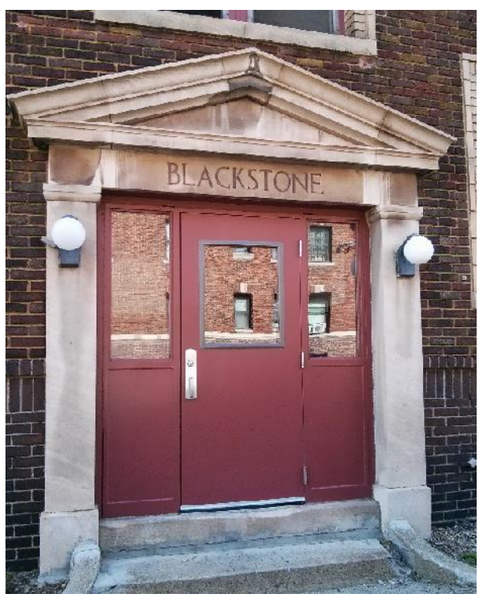

Exist Conditions Door #1, 1st Avenue S Elevation

NTS

Exist Conditions Door #2, E 19th Street West Elevation

NTS

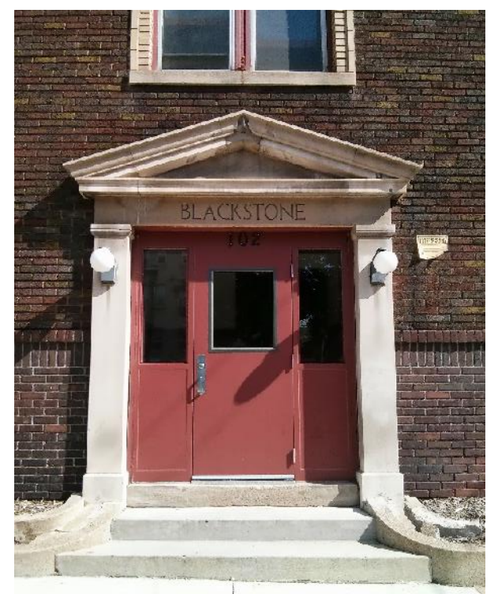

Exist Conditions Door #3, E 19th Street East Elevation

NTS

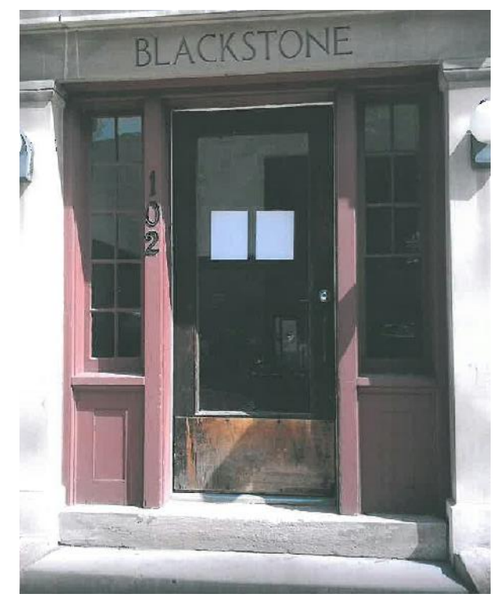

Original Door Elevation

NTS

ISSUE & REVISION

APPLICATION: 10.17.2013

COMM #1314

DKC PROPERTIES
128 E 16th St, Minneapolis MN 55403

1201 HAWTHORNE AVENUE, SUITE 400
MINNEAPOLIS, MINNESOTA 55403
TEL: 612-332-5420
FAX: 612-332-5425
WWW.MILLERHANSON.COM
MILLER HANSON PARTNERS

I HEREBY CERTIFY THAT THIS PLAN, SPECIFICATION OR REPORT, WAS PREPARED BY ME OR UNDER MY DIRECT SUPERVISION AND THAT I AM A REGISTERED ARCHITECT UNDER THE LAWS OF THE STATE OF MINNESOTA

Kent Simon
DATE: XX.XX.20XX NO. 16390

TITLE SHEET
ENTRY DOOR ELEVATION

A100

2013 Miller Hanson Partners

Stevens Community Apartments Entry Doors Renovation

102 E 19th Street, Minneapolis MN, 55403

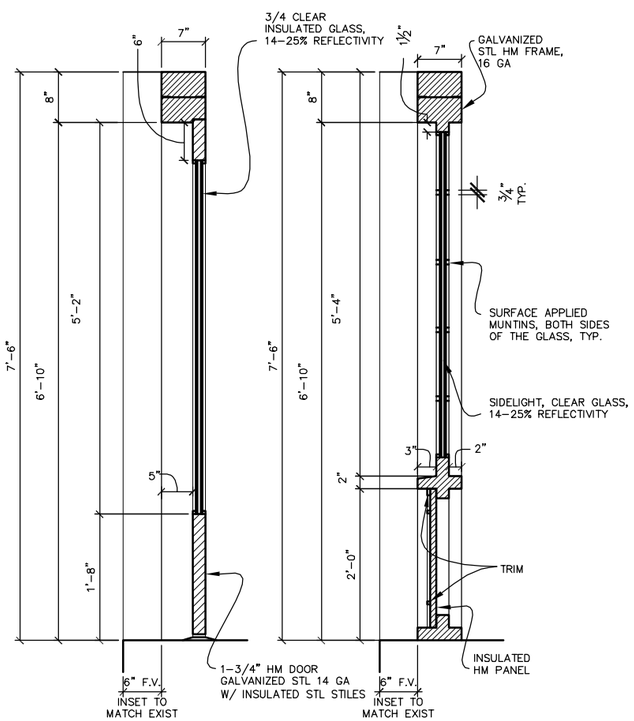

6 **Proposed Remodeled Door #3, Sections**
1/2" = 1'-0"

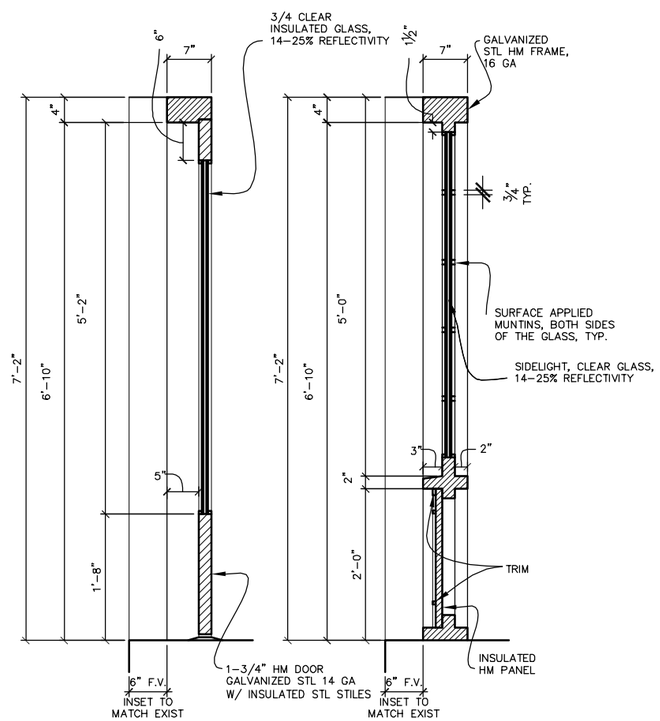

5 **Proposed Remodeled Doors #1 & #2, Sections**
1/2" = 1'-0"

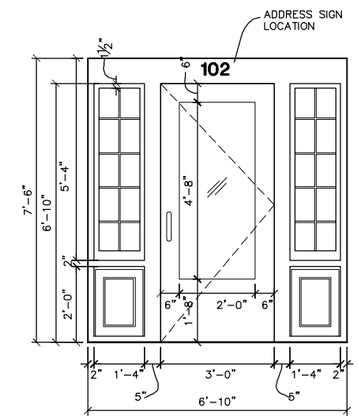

NEW METAL DOOR TO MATCH THE ORIGINAL (SEE PHOTO), PAINT TO MATCH EXISTING (COLOR SAMPLE ATTACHED)

4 **Proposed Remodeled Door #3**
1/4" = 1'-0"

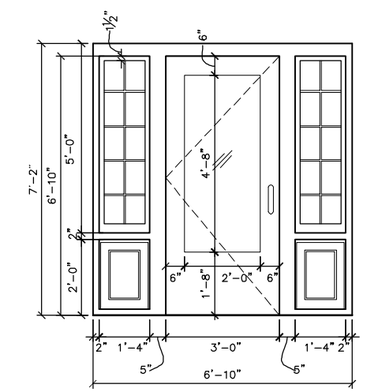

NEW METAL DOOR TO MATCH THE ORIGINAL (SEE PHOTO), PAINT TO MATCH EXISTING (COLOR SAMPLE ATTACHED)

3 **Proposed Remodeled Doors #1 & #2**
1/4" = 1'-0"

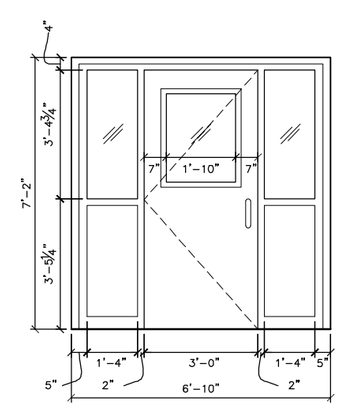

EXISTING METAL DOOR W/ HALF–HEIGHT SIDELIGHTS

2 **Existing Doors #1 & #2**
1/4" = 1'-0"

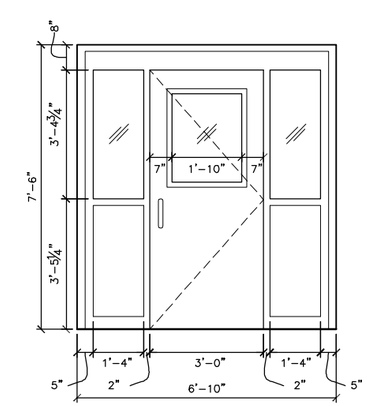

EXISTING METAL DOOR W/ HALF–HEIGHT SIDELIGHTS

1 **Existing Door #3, 19th St East Elevation**
1/4" = 1'-0"

ISSUE & REVISION
APPLICATION: 10.17.2013
COMM #1314

DKC PROPERTIES
128 E 19th St, Minneapolis MN 55403

1201 HAWTHORNE AVENUE, SUITE 400 MINNEAPOLIS, MINNESOTA 55403
TEL: 612-332-5420
FAX: 612-332-5425
WWW.MILLERHANSON.COM
MILLER HANSON PARTNERS

I HEREBY CERTIFY THAT THIS PLAN, SPECIFICATION, OR REPORT WAS PREPARED BY ME OR UNDER MY DIRECT SUPERVISION AND THAT I AM A REGISTERED ARCHITECT UNDER THE LAWS OF THE STATE OF MINNESOTA.
Kent Simon
Kent Simon
DATE: XX.XX.20XX NO. 16390

TITLE SHEET
ENTRY DOOR ELEVATION
A101

2013 Miller Hanson Partners

Stevens Community Apartments | **6**

NAME OF APPLICANT | WARD

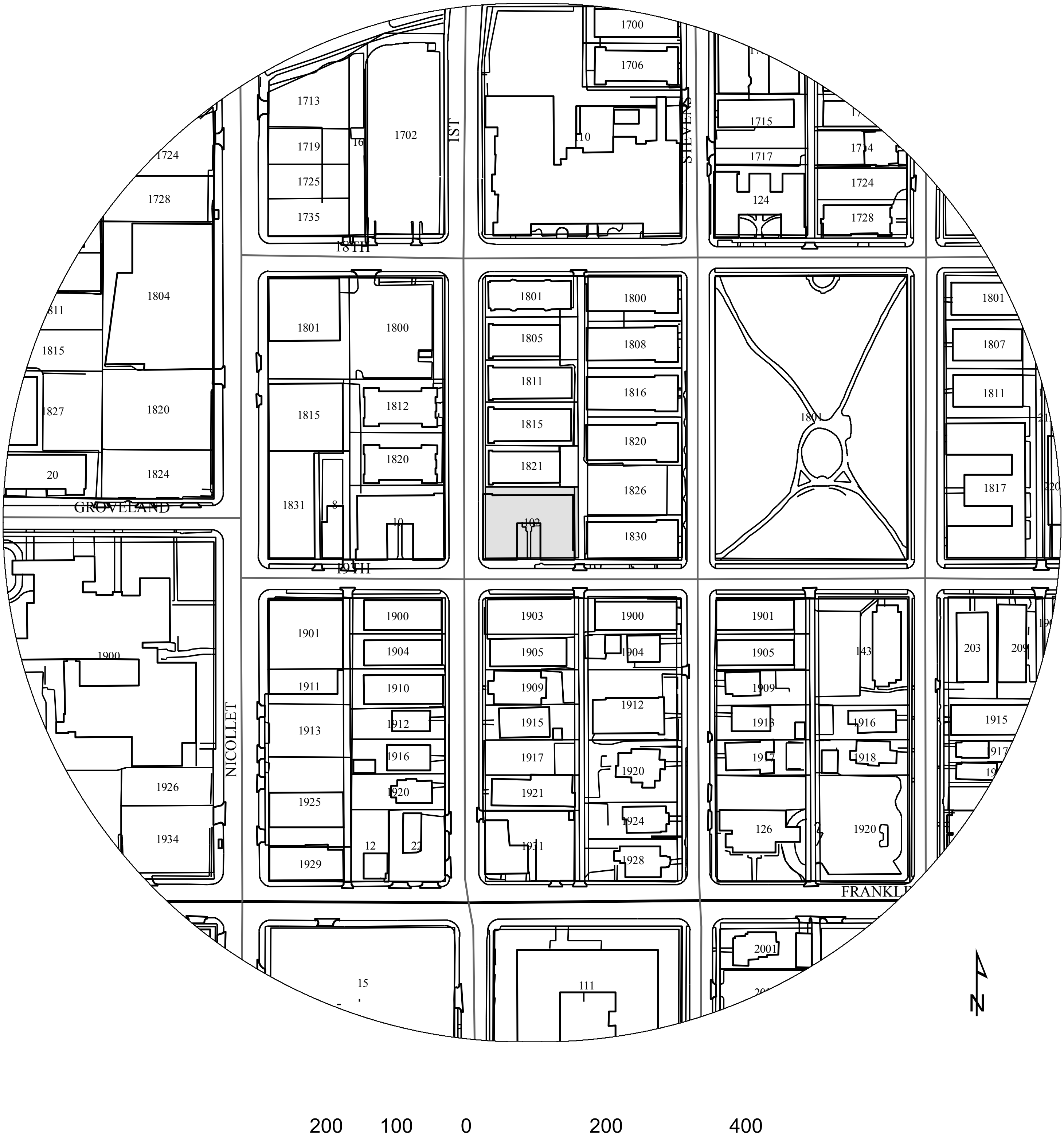

PROPERTY ADDRESS

102 E 19th St

FILE NUMBER

BZH-27877

Widmeier, Janelle A.

From: Steven Gallagher <steven.gallagher3@gmail.com>
Sent: Monday, October 21, 2013 4:17 PM
To: Widmeier, Janelle A.
Subject: Stevens Community Apartments

Ms. Widmeier,

I wanted to pass along to you that Stevens Community Apartments did present to the Stevens Square Community Organizations Neighborhood Development Committee, as well as to our Board of Directors. Both unanimously voted to approve and support the metal door replacement at 102 East 19th Street.

However, as an organization we have also noticed that there are many entrance doors in the historic district that have varying degrees of cohesiveness. In the past six years this is the only application that has been brought forward to our attention.

Again, to reiterate, SSCO felt the plans and specifications from SCA for 102 East 19th Street were compatible with the historic district.

Steven Gallagher
Executive Director
Stevens Square Community Organization