HUNG

Aluminum EnduraClad® Exterior
SE Double-Hung
Unit Sections

Scale 3" = 1' 0"

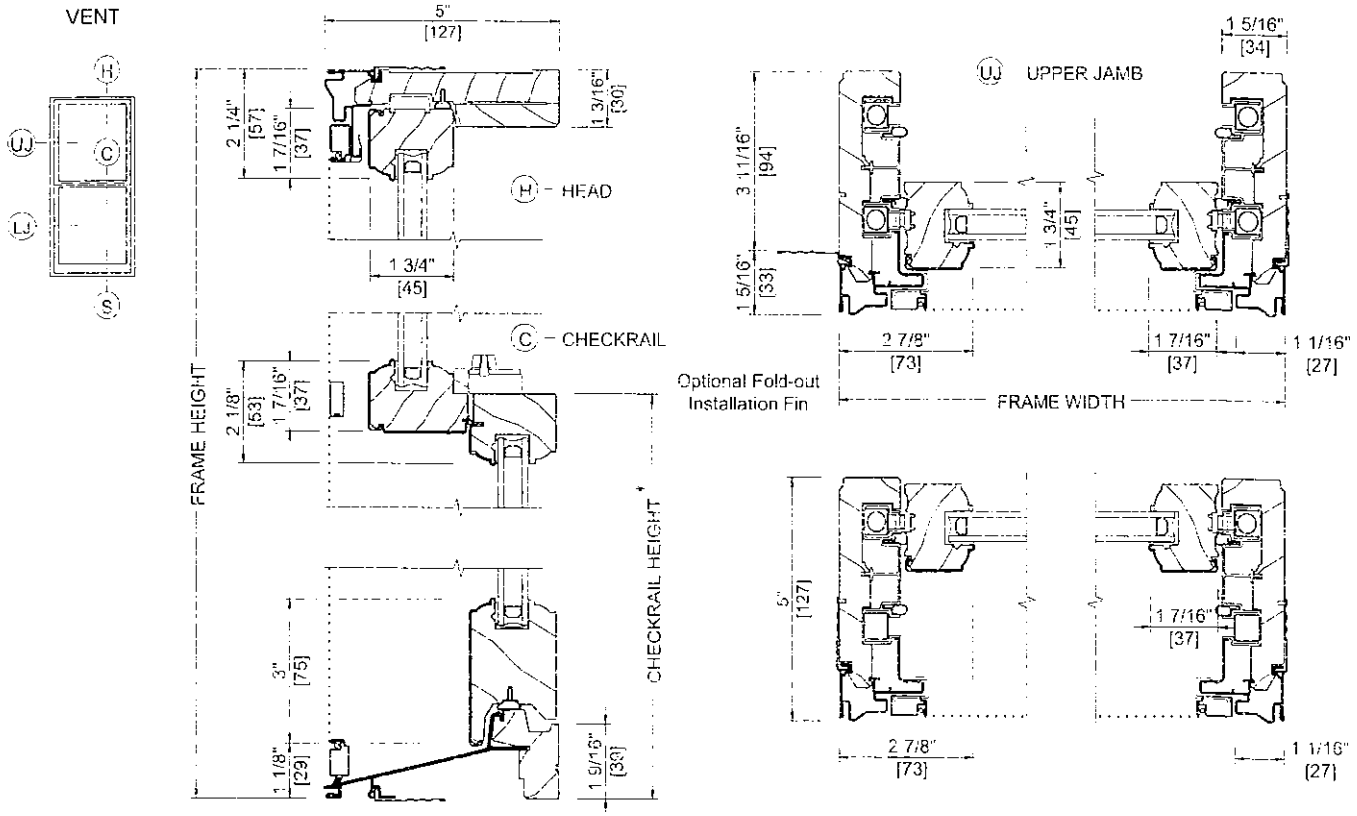

* Dimension required for ordering units with unequal sash.

Windows approved on rear addition in 2012

All dimensions are approximate.