CPED STAFF REPORT

Prepared for the City Planning Commission
CPC Agenda Item #4
January 25, 2016
BZZ-7542

LAND USE APPLICATION SUMMARY

Property Location: 1730 Clifton Place

Project Name: Episcopal Commons

Prepared By: Hilary Dvorak, Principal Planner, (612) 673-2639

Applicant: Episcopal Homes

Project Contact: Marvin Plakut

Request: To construct a new mixed-use building containing 64 dwelling units and approximately 5,700 square feet of office space.

Required Applications:

Conditional Use Permit	To increase the height of the building in the SH Shoreland Overlay District from 2.5 stories or 35 feet to 4 stories or 59 feet.
Variance	To increase the maximum number of parking spaces from 94 spaces to 163 spaces.
Variance	To increase the amount of lot coverage allowed on the site from 70 percent to 75 percent.
Variance	To reduce the front yard setback along Clifton Place from 15 feet to 0 feet.
Variance	To reduce the front yard setback along Groveland Avenue from 15 feet to nine feet.
Site Plan Review	For a new mixed-use building containing 64 dwelling units and approximately 5,700 square feet of office space.

SITE DATA

Existing Zoning	OR2 High Density Office Residence District SH Shoreland Overlay District and DP Downtown Parking Overlay District
Lot Area	44,841 square feet / 1.03 acres
Ward(s)	7
Neighborhood(s)	Loring Park
Designated Future Land Use	Urban Neighborhood
Land Use Features	Growth Center (Downtown)
Small Area Plan(s)	*Loring Park Neighborhood Master Plan* (2013)

Date Application Deemed Complete	December 30, 2015	**Date Extension Letter Sent**	Not applicable
End of 60-Day Decision Period	February 28, 2015	**End of 120-Day Decision Period**	Not applicable

BACKGROUND

SITE DESCRIPTION AND PRESENT USE. The property is located in Downtown Minneapolis. The site is located at the intersection of Groveland Avenue and Clifton Place. The site is currently occupied by an office building. The Episcopal Church of Minnesota owns and offices out of the building.

SURROUNDING PROPERTIES AND NEIGHBORHOOD. The site is surrounded by residential developments of varying densities, Saint Mark's Episcopal Cathedral, the Hennepin Avenue United Methodist Church, and office uses. The site is located in the Loring Park neighborhood.

PROJECT DESCRIPTION. The applicant is proposing to demolish the existing office building and construct a new four-story, mixed use building with two levels of below-ground parking. There will be 64 dwelling units (including one guest suite) and approximately 5,700 square feet of office space in the building. There will be dwelling units on all four floors of the building. The office space will be located on the first floor of the building and will be utilized by the Episcopal Church of Minnesota. Also on the first floor of the building there will be a community room and a fitness center for the residents. There will be additional community spaces on the fourth floor of the building with an outdoor deck. There will also be a large landscaped yard located towards the back of the building that will include both active and passive spaces.

There will be 163 parking spaces provided in two levels of below-ground parking. The applicant has indicated that there will be one parking space provided per dwelling unit and that the rest of the parking spaces will be owned by Saint Mark's Episcopal Cathedral. There will be a door located on the lower level of the parking garage that can be utilized to traverse to and from the cathedral which is located northwesterly of the development site.

RELATED APPROVALS. In 2007, the City Planning Commission approved an eight-story, 48-unit residential development on the site (BZZ-3509). Although it was approved, the development was never constructed.

PUBLIC COMMENTS. No comment letters have been received in regards to this application. Any correspondence received prior to the public meeting will be forwarded on to the Planning Commission for consideration.

ANALYSIS

CONDITIONAL USE PERMIT

The Department of Community Planning and Economic Development has analyzed the application to increase the height of the building in the SH Shoreland Overlay District from 2.5 stories or 35 feet to 4 stories or 59 feet based on the following findings:

1. *The establishment, maintenance or operation of the conditional use will not be detrimental to or endanger the public health, safety, comfort or general welfare.*

   The development site is located in the SH Shoreland Overlay District which has a 2.5-story or 35-foot height limitation. The applicant is proposing to construct a 4-story or 59-foot high building. Increasing the height of the building from 2.5 stories or 35 feet to 4 stories or 59 feet will not be detrimental to or endanger the public health, safety, comfort or general welfare.

2. *The conditional use will not be injurious to the use and enjoyment of other property in the vicinity and will not impede the normal and orderly development and improvement of surrounding property for uses permitted in the district.*

   Increasing the height of the building from 2.5 stories or 35 feet to 4 stories or 59 feet will not be injurious to the use and enjoyment of other property in the vicinity or impede the normal or orderly development and improvement of surrounding property. The building immediately to the west of the site is six stories in height and the two buildings immediately to the north are two stories in height. Other buildings in the area range between two stories to over 20 stories in height.

3. *Adequate utilities, access roads, drainage, necessary facilities or other measures, have been or will be provided.*

   Increasing the height of the building will have no impact on utilities, access roads or drainage.

4. *Adequate measures have been or will be taken to minimize traffic congestion in the public streets.*

   Increasing the height of the building will have no impact on traffic congestion in the public streets. The parking requirement for the development will be met on site.

5. *The conditional use is consistent with the applicable policies of the comprehensive plan.*

   The proposed development would be consistent with the following policies of *The Minneapolis Plan for Sustainable Growth*:

   Use Policy 1.2: Ensure appropriate transitions between uses with different size, scale, and intensity.

   1.2.1 Promote quality design in new development, as well as building orientation, scale, massing, buffering, and setbacks that are appropriate with the context of the surrounding area.

   Land Use Policy 1.8: Preserve the stability and diversity of the city's neighborhoods while allowing for increased density in order to attract and retain long-term residents and businesses.

   1.8.1 Promote a range of housing types and residential densities, with highest density development concentrated in and along appropriate land use features.

   Land Use Policy 1.15: Support development of Growth Centers as locations for concentration of jobs and housing, and supporting services.

   1.15.3 Encourage the development of high- to very high-density housing within Growth Centers.

   The Loring Park Neighborhood Master Plan was adopted by the City Council in 2013. In the plan, the site is located in the Loring Hill Land Use and Built Form District. In this district the height guidance for infill development is four stories.

6. *The conditional use shall, in all other respects, conform to the applicable regulations of the district in which it is located.*

   If the requested land use applications are approved, the proposal will comply with all provisions of the OR2 High Density Office Residence District, the SH Shoreland Overlay District and the DP Downtown Parking Overlay District.

Additional Standards to Increase Maximum Height

In addition to the conditional use permit standards, the Planning Commission shall consider, but not be limited to, the following factors when determining the maximum height of principal structures in commercial districts:

1. *Access to light and air of surrounding properties.*

   The height of the proposed building will not impede access to light and air that surrounding properties receive. The residential building immediately to the west of the site is six stories in height and the two residential buildings immediately to the north are two stories in height. There will be over 30 feet of open space between the proposed building and the adjacent building to the west and over 40 feet of open space between the proposed building and the adjacent buildings to the north. All other surrounding properties are separated from the site by public streets.

2. *Shadowing of residential properties, significant public spaces, or existing solar energy systems.*

   A shadow study was done that depicts shadowing impacts at 9 am, at noon, at 3 pm and at 6 pm in March, June, September and December. The shadow study indicates that there will be shadows cast on the residential buildings to the west and north at different times of the day throughout the year; however, the shadowing impacts do not appear to be significant given the context of the area. The shadow study indicates that, due to the fact that the neighborhood is densely built-out, that during the periods of peak shadowing, much of the surrounding vicinity is currently shadowed by existing buildings. In addition, staff is not aware of any existing solar energy systems that would be affected by the proposed building.

3. *The scale and character of surrounding uses.*

   The building immediately to the west of the site is six stories in height and the two buildings immediately to the north are two stories in height. Other buildings in the area range between two stories to over 20 stories in height. The proposed four-story building will be compatible with the surrounding area.

4. *Preservation of views of landmark buildings, significant open spaces or water bodies.*

   There are a number of buildings in the area that one could classify as landmarks. Although not all of these structures are historically designated they are well known to many in the City of Minneapolis: the Hennepin Avenue United Methodist Church, 510 Groveland, the Walker Art Museum, the Charles B. Lyon House, the Daniel B. Lyon House, Saint Mark's Episcopal Cathedral, the Loring Office Building and the Woman's Club of Minneapolis. In addition to these buildings, Loring Pond and the Minneapolis Sculpture Garden are within close proximity to the site. Given the terrain of the area and that there are residential buildings over 20 stories nearby, the proposed development will likely impact views of the above referenced open space, water body and some of the mentioned structures.

Additional Standards for Conditional Use Permits within the SH Shoreland Overlay District

In addition, the Planning Commission shall consider, but not be limited to, the following factors when considering conditional use permit or variance requests within the SH Shoreland Overlay District:

1. *The prevention of soil erosion or other possible pollution of public waters, both during and after construction.*

   The subject property is approximately 450 feet from Loring Pond. It is unlikely that construction on the site will impact or pollute Loring Pond. The applicant will be working closely with CPED, the

Public Works Department and the various utility companies during the duration of the development to ensure that all procedures are followed in order to comply with city and other applicable requirements.

2. *Limiting the visibility of structures and other development from protected waters.*

   The requested height increase would increase the visibility of the development from Loring Pond compared to a development built to comply with the SH Shoreland Overlay District. However, the proposed development would blend in with other structures within the neighborhood given the topography of the area and the layering of buildings going up the hill.

3. *The suitability of the protected water to safely accommodate the types, uses and numbers of watercraft that the development may generate.*

   The proposed development will not generate watercraft activity on surrounding bodies of water.

VARIANCE

The Department of Community Planning and Economic Development has analyzed the application for a variance to increase the maximum amount of parking spaces from 94 spaces to 163 spaces based on the following findings:

1. *Practical difficulties exist in complying with the ordinance because of circumstances unique to the property. The unique circumstances were not created by persons presently having an interest in the property and are not based on economic considerations alone.*

   In the OR2 High Density Office Residence District the minimum parking requirement for a multiple-family dwelling is one space per unit. The site is located within a quarter-mile of a bus transit stop with midday service headways of 15 minutes of less. Given this, the minimum parking requirement may be reduced by 50 percent. In addition, multiple-family dwellings of 50 units or more are required to provide one visitor parking space at a ratio of not less than one space per 50 dwelling units. There are a total of 64 dwelling units in the building (including one guest suite). The minimum parking requirement for the residential portion of the development is 32 parking spaces.

   In the DP Downtown Parking Overlay District the maximum parking requirement for a multiple-family dwelling is 1.7 spaces per unit. The maximum parking requirement for the residential portion of the development is 109 spaces. However, the applicant has indicated that there will be no more than 64 parking spaces provided for the residential portion of the development within the building.

   In the DP Downtown Parking Overlay District the minimum parking requirement for an office is one space per 4,000 square feet of gross floor area over 4,000 square feet and the maximum parking requirement for an office is one space per 200 square feet of gross floor area. There is approximately 5,700 square feet of office space in the building. The minimum parking requirement for the office portion of the development is zero spaces and the maximum parking requirement for the office portion of the development is 29 spaces.

   Besides the 64 parking spaces that will be dedicated for the residential portion of the development, the remaining 99 parking spaces will be owned by Saint Mark's Episcopal Cathedral. Because the parking available for the residential is being capped at one space per unit, leaving 103 spaces available for Saint Mark's, a variance of the maximum parking requirement is needed as the overall parking maximum is being exceeded for all of the uses within the building.

   Practical difficulties exist in complying with the ordinance because of circumstances unique to the property. The applicant has indicated that since they are excavating to construct below-ground

parking for the residential and office portions of the building that they would construct a full second level to accommodate parking for Saint Mark's parishioners and others within the neighborhood.

2. *The property owner or authorized applicant proposes to use the property in a reasonable manner that will be in keeping with the spirit and intent of the ordinance and the comprehensive plan.*

   The applicant is proposing to use the property in a reasonable manner that will be in keeping with the spirit and intent of the ordinance and the comprehensive plan. Parking regulations are established to recognize the parking needs of uses and structures, to enhance the compatibility between parking areas and their surroundings, and to regulate the number, design, maintenance, use and location of off-street parking spaces and the driveways and aisles that provide access and maneuvering space. The regulations promote flexibility and recognize that excessive off-street parking conflicts with the city's policies related to transportation, land use, urban design, and sustainability.

   The Loring Park Neighborhood Master Plan, which was adopted in 2013, encourages developers to provide public and/or neighborhood parking in new buildings. The applicant has indicated that the 103 non-residential parking spaces within the building will be made available to parishioners of Saint Mark's and others within the neighborhood. Providing the additional parking will help alleviate pressure on the public streets.

3. *The proposed variance will not alter the essential character of the locality or be injurious to the use or enjoyment of other property in the vicinity. If granted, the proposed variance will not be detrimental to the health, safety, or welfare of the general public or of those utilizing the property or nearby properties.*

   Granting of this variance will not alter the essential character of the locality or be injurious to the use or enjoyment of other property in the vicinity. In addition, granting of the variance will not be detrimental to the health, safety, or welfare of the general public or of those utilizing the property or nearby properties. All of the proposed parking will be located within the building. Given this, regardless of the number of spaces provided within the building, visually the development will look the same from the exterior. The additional parking spaces will help alleviate pressure on the public streets.

VARIANCE

The Department of Community Planning and Economic Development has analyzed the application for a variance to increase the amount of lot coverage allowed on the site from 70 percent to 75 percent based on the following findings:

1. *Practical difficulties exist in complying with the ordinance because of circumstances unique to the property. The unique circumstances were not created by persons presently having an interest in the property and are not based on economic considerations alone.*

   The maximum lot coverage allowed in the OR2 High Density Office Residence District is 70 percent. The size of the lot is 44,841 square feet. Seventy percent of the lot area is 31,388 square feet. The footprint of the building, including the underground parking garage, is 33,715 square feet. This equates to 75 percent of the lot.

   Practical difficulties exist in complying with the ordinance because of circumstances unique to the property. The topography of the site is such that there is a 16-foot grade change from the northwest corner of the site to the middle of the property frontage along Clifton Place. Given the grade change, the western portion of the parking ramp is exposed. While the parking garage does

extend above ground the roof of the ramp has been designed to accommodate an intensive green roof.

2. *The property owner or authorized applicant proposes to use the property in a reasonable manner that will be in keeping with the spirit and intent of the ordinance and the comprehensive plan.*

   The applicant is proposing to use the property in a reasonable manner that will be in keeping with the spirit and intent of the ordinance and the comprehensive plan. The purpose of lot controls are established to provide for the orderly development and use of land and to minimize conflicts among land uses by regulating the use of lots and lot area in order to provide adequate light, air, open space and separation of uses. While the proposed building is exceeding the allowed lot coverage, the applicant is proposing to landscape the roof of the parking garage so it will have less of an impact on stormwater runoff.

3. *The proposed variance will not alter the essential character of the locality or be injurious to the use or enjoyment of other property in the vicinity. If granted, the proposed variance will not be detrimental to the health, safety, or welfare of the general public or of those utilizing the property or nearby properties.*

   Granting of this variance will not alter the essential character of the locality or be injurious to the use or enjoyment of other property in the vicinity. In addition, granting of the variance will not be detrimental to the health, safety, or welfare of the general public or of those utilizing the property or nearby properties. Since the roof of the parking garage will be landscaped its appearance will be minimized and one wouldn't necessarily realize that it extends above grade. The ability to accommodate stormwater runoff within the green roof will also minimize the impact on adjacent properties.

VARIANCE

The Department of Community Planning and Economic Development has analyzed the application for a variance to reduce the front yard setback along Clifton Place from 15 feet to 0 feet based on the following findings:

1. *Practical difficulties exist in complying with the ordinance because of circumstances unique to the property. The unique circumstances were not created by persons presently having an interest in the property and are not based on economic considerations alone.*

   The required front yard setback in the OR2 High Density Office Residence District is 15 feet. Along Clifton Place the building is located between six and 18 from the front property line. There are also staircases greater than eight feet in width and balconies projecting more than four feet from the building that require the setback variance. There is also a transformer located in the northeast corner of the property that is not permitted in the required front yard without a variance.

   Practical difficulties exist in complying with the ordinance because of circumstances unique to the property. The property line along Clifton Place is not straight as it follows the curve of the street. In addition, the topography of the site is such that there is a 16-foot grade change from the northwest corner of the site to the middle of the property frontage along Clifton Place. The curvilinear street and unique topographic conditions have not been created by the property owner.

2. *The property owner or authorized applicant proposes to use the property in a reasonable manner that will be in keeping with the spirit and intent of the ordinance and the comprehensive plan.*

   The applicant is proposing to use the property in a reasonable manner that will be in keeping with the spirit and intent of the ordinance and the comprehensive plan. The intent of yard controls are

established to provide for the orderly development and use of land and to minimize conflicts among land uses by regulating the dimension and use of yards in order to provide adequate light, air, open space and separation of uses. The placement of the proposed building will be compatible with the placement of the adjacent buildings to the west and the north. There will be over 30 feet of open space between the proposed building and the adjacent building to the west and over 40 feet of open space between the proposed building and the adjacent buildings to the north. The provided open space will allow for adequate access to light and air for surrounding properties and adequate separation of uses.

3. *The proposed variance will not alter the essential character of the locality or be injurious to the use or enjoyment of other property in the vicinity. If granted, the proposed variance will not be detrimental to the health, safety, or welfare of the general public or of those utilizing the property or nearby properties.*

   Granting of this variance will not alter the essential character of the locality or be injurious to the use or enjoyment of other property in the vicinity. In addition, granting of the variance will not be detrimental to the health, safety, or welfare of the general public or of those utilizing the property or nearby properties. As noted above, there will be over 30 feet of open space between the proposed building and the adjacent building to the west and over 40 feet of open space between the proposed building and the adjacent buildings to the north.

   The transformer does need to be screened per Chapter 535, Regulations for General Applicability. While the transformer will be located in a required front yard the applicant is proposing to wrap it so it is visually more appealing. CPED is recommending that the design of the transformer wrap be reviewed and approved by CPED. In addition, CPED is recommending that perennial grasses be planted between the public sidewalk and the transformer for additional screening.

VARIANCE

The Department of Community Planning and Economic Development has analyzed the application for a variance to reduce the front yard setback along Groveland Avenue from 15 feet to nine feet based on the following findings:

1. *Practical difficulties exist in complying with the ordinance because of circumstances unique to the property. The unique circumstances were not created by persons presently having an interest in the property and are not based on economic considerations alone.*

   The required front yard setback in the OR2 High Density Office Residence District is 15 feet. Along Groveland Avenue the building itself is located nine feet from the front property line. Practical difficulties exist in complying with the ordinance because of circumstances unique to the property. The property line along Groveland Avenue is not straight as it follows the curve of the street. In addition, the topography of the site is such that there is a 16-foot grade change from the northwest corner of the site to the middle of the property frontage along Clifton Place. The curvilinear street and unique topographic conditions have not been created by the property owner.

2. *The property owner or authorized applicant proposes to use the property in a reasonable manner that will be in keeping with the spirit and intent of the ordinance and the comprehensive plan.*

   The applicant is proposing to use the property in a reasonable manner that will be in keeping with the spirit and intent of the ordinance and the comprehensive plan. The intent of yard controls are established to provide for the orderly development and use of land and to minimize conflicts among land uses by regulating the dimension and use of yards in order to provide adequate light, air, open space and separation of uses. The placement of the proposed building will be compatible with the

placement of the adjacent buildings to the west and the north. There will be over 30 feet of open space between the proposed building and the adjacent building to the west and over 40 feet of open space between the proposed building and the adjacent buildings to the north. The provided open space will allow for adequate access to light and air for surrounding properties and adequate separation of uses.

3. *The proposed variance will not alter the essential character of the locality or be injurious to the use or enjoyment of other property in the vicinity. If granted, the proposed variance will not be detrimental to the health, safety, or welfare of the general public or of those utilizing the property or nearby properties.*

   Granting of this variance will not alter the essential character of the locality or be injurious to the use or enjoyment of other property in the vicinity. In addition, granting of the variance will not be detrimental to the health, safety, or welfare of the general public or of those utilizing the property or nearby properties. As noted above, there will be over 30 feet of open space between the proposed building and the adjacent building to the west and over 40 feet of open space between the proposed building and the adjacent buildings to the north.

SITE PLAN REVIEW

The Department of Community Planning and Economic Development has analyzed the application based on the required findings and applicable standards in the site plan review chapter:

1. Conformance to all applicable standards of Chapter 530, Site Plan Review.

BUILDING PLACEMENT AND DESIGN

Building placement – *Requires alternative compliance*

- The front yard setback requirement along both Clifton Place and Groveland Avenue is 15 feet. The building will be set back between six and 18 feet from the front property line along Groveland Avenue and the building will be set back nine feet from the front property line along Clifton Place. Alternative compliance is required.
- The placement of the building reinforces the street wall, maximizes natural surveillance and visibility, and facilitates pedestrian access and circulation. The building will be located close to the front property lines, there will be a principal entrance at street level that can be accessed by residents, guests and employees and there will be large windows and balconies on all sides of the building that maximize the opportunities for people to observe adjacent spaces and the public sidewalk.
- The area between the building and front lot line includes landscaping.
- All of the on-site parking will be provided in two levels of below-ground parking.

Principal entrances – *Meets requirements*

- The principal entrance to the building, which will be used to access the residential and office portions of the building, will be oriented towards Clifton Place. In addition, there will be five individual dwelling unit entrances along Clifton Place.
- The principal entrance is clearly defined and emphasized through the use of a two-story entryway. In addition, the entry is surrounded by stone which is not used on the rest of the building.

Visual interest – *Meets requirements*

- The building walls provide architectural detail and contain windows in order to create visual interest.
- The building wall along Clifton Place is approximately 300 feet in length. The applicant has used a simple pallet of materials, recesses and projections in the building wall, projecting balconies and an accentuated cornice to break up the facade into smaller sections.
- There are no areas of the building that are over 25 feet in length and void of windows, entries, recesses or projections, or other architectural elements.

Exterior materials – *Meets requirements*

- The applicant is proposing brick and stone as the building's primary exterior materials. Each elevation would comply with the City's durability standards for exterior materials.
- In addition, the application is consistent with the City's policy of allowing no more than three exterior materials per elevation, excluding windows, doors, and foundation materials.
- Plain face concrete block is not proposed along any public streets, sidewalks, or adjacent to a residence or office residence district.
- The exterior materials and appearance of the rear and side walls of the building are similar to and compatible with the front of the building.

Windows – *Meets requirements*

- For residential uses, the zoning code requires that no less than 20 percent of the walls on the first floor, and no less than ten percent of the walls on each floor above the first that face a public street, public sidewalk, public pathway, or on-site parking lot, shall be windows. The project is in compliance with the minimum window requirement (see Table 3).
- All windows are vertical in proportion and are evenly distributed along the building walls.

Table 1. Percentage of Windows per Applicable Elevation

	Code Requirement		Proposed	
Residential Uses				
1st floor facing Clifton Place	20% minimum	442 sq. ft.	668%	30 sq. ft.
2nd floor and above facing Clifton Place	10% minimum	304 sq. ft.	Over 10%	
1st floor facing Groveland Avenue	20% minimum	106 sq. ft.	32%	168 sq. ft.
2nd floor and above facing Groveland Avenue	10% minimum	73 sq. ft.	Over 10%	
Nonresidential Uses				
The office portion of the development does not face a public street, public sidewalk, public pathway, or on-site parking lot				

Ground floor active functions – *Meets requirements*

- Approximately 92 percent of the ground floor of the building facing Clifton Place contains active functions and the entire ground floor of the building facing Groveland Avenue contains active functions.

Roof line – *Meets requirements*

- The principal roof line of the building will be flat. There is a mixture of roof types in the immediate area.

Parking garages – *Meets requirements*

- All of the parking spaces will be provided in two levels of below-ground parking.

ACCESS AND CIRCULATION

Pedestrian access – *Meets requirements*

- The principal entrance and the individual dwelling unit entrances are connected to the public sidewalk via walkways of at least four feet in width.

Transit access – *Not applicable*

- No transit shelters are proposed as part of this development.

Vehicular access – *Meets requirements*

- There will be a total of 163 parking spaces provided on-site. All of the parking spaces will be provided in two levels of below-ground parking. Access to the parking area is located along Clifton Place.
- There are no public alleys adjacent to the site.
- The maximum impervious surface allowance in the OR3 zoning district is 85 percent. According to the materials submitted by the applicant 84 percent of the site will be impervious.

LANDSCAPING AND SCREENING

General landscaping and screening – *Requires alternative compliance*

- The zoning code requires that at least 20 percent of the site not occupied by the building be landscaped. The lot area of the site is 44,841 square feet. The footprint of the buildings is 33,715 square feet. When you subtract the footprint from the lot size the resulting number is 11,126 square feet. Twenty percent of this number is 2,225 square feet. According to the applicant's landscaping plan there will be 7,276 square feet of landscaping on the site or approximately 65 percent of the site not occupied by the building.
- The zoning code requires at least one canopy tree for each 500 square feet of required green space and at least one shrub for each 100 square feet of required green space be planted on the site. The tree and shrub requirement is five and 23 respectively. The applicant is proposing to plant 1canopy tree and 364 shrubs on the site. In addition, the applicant is proposing to plant eight ornamental trees, 318 perennials and additional ground clover and vines on the site. Alternative compliance is required.
- The topography of the site is such that there is a 16-foot grade change from the northwest corner of the site to the middle of the property frontage along Clifton Place. Given this there will be a retaining wall constructed along the west property line. At the tallest point, the retaining wall is approximately 16 feet in height. To break up the overall length of the wall, the applicant has terraced portions of the wall and angled the wall at one point to create visual interest. The applicant is also proposing to plant vines that will cascade over the top of the retaining wall to further break up its length.

Table 2. Landscaping and Screening Requirements

	Code Requirement	Proposed
Lot Area	--	44,841 sq. ft.
Building Footprint	--	33,715 sq. ft.
Remaining Lot Area	--	11,126 sq. ft.
Landscaping Required	2,225 sq. ft.	7,267 sq. ft.
Canopy Trees (1:500 sq. ft.)	5 trees	1 tree
Shrubs (1:100 sq. ft.)	23 shrubs	364 shrubs

Parking and loading landscaping and screening – *Not applicable*

- There are no surface parking spaces proposed on the site.

ADDITIONAL STANDARDS

Concrete curbs and wheel stops – *Not applicable*

- There are no surface parking spaces proposed on the site.

Site context – *Meets requirements*

- There are a number of buildings in the area that one could classify as landmarks. Although not all of these structures are historically designated they are well known to many in the City of Minneapolis: the Hennepin Avenue United Methodist Church, 510 Groveland, the Walker Art Museum, the Charles B. Lyon House, the Daniel B. Lyon House, Saint Mark's Episcopal Cathedral, the Loring Office Building and the Woman's Club of Minneapolis. In addition to these buildings, Loring Pond and the Minneapolis Sculpture Garden are within close proximity to the site. Given the terrain of the area and that there are residential buildings over 20 stories nearby, the proposed development will likely impact views of the above referenced open space, water body and some of the mentioned structures.
- A shadow study was done that depicts shadowing impacts at 9 am, at noon, at 3 pm and at 6 pm in March, June, September and December. The shadow study indicates that there will be shadows cast on the residential buildings to the west and north at different times of the day throughout the year; however, the shadowing impacts do not appear to be significant given the context of the area. The shadow study indicates that due to the fact that the neighborhood is densely built-out, that during the periods of peak shadowing, much of the surrounding vicinity is currently shadowed by existing buildings.
- The building has been designed with recesses and projections along the building walls and projecting balconies which should help minimize wind effects on the surrounding area.

Crime prevention through environmental design – *Meets requirements*

- The site plan complies with crime prevention design elements as the entrance is oriented towards the public sidewalk, walkways direct people to and from the building entrances, there will be large windows and balconies on all sides of the building that maximize the opportunities for people to observe adjacent spaces and the public sidewalks and there will be lights located near all of the building entrances and throughout the grounds.

Historic preservation – *Meets requirements*

- This site is neither historically designated nor is it located in a historic district.

2. Conformance with all applicable regulations of the zoning ordinance.

The proposed use is permitted in the OR2 High Density Office Residence District.

Off-street Parking and Loading – *Requires variance(s)*

- The applicant has applied for a variance to increase the maximum amount of parking spaces from 94 spaces to 163 spaces (see Table 5).
- The bicycle parking requirement for the office portion of the development is three spaces; two of these spaces need to be long-term. The applicant is proposing to provide six short-term spaces for the office portion of the development. CPED is recommending that there be two long-term bicycle parking spaces provided within the parking garage for the office portion of the development (see Table 6).

Table 3. Vehicle Parking Requirements Per Use (Chapter 541)

Use	Minimum	Reductions	Total with Reductions	Maximum Allowed	Proposed
Residential Dwellings	64	Transit Incentives (32)	32	109	64
Office	0	--	0	29	99
	65	**(32)**	**32**	**139**	**163**

Table 4. Bicycle Parking Requirements (Chapter 541)

Use	Minimum	Short-Term	Long-Term	Proposed
Residential Dwellings	32	--	Not less than 90% 29	30 long-term
Office	3	--	Not less than 50% 2	6 short-term
	35	**--**	**31**	**36**

Table 5. Loading Requirements (Chapter 541)

Use	Loading Requirement	Minimum Requirement	Proposed
Residential Dwellings	None	0	0
Office	None	0	0
	None	**0**	**0**

Building Bulk and Height – *Requires conditional use permit*

- The applicant has applied for a conditional use permit to increase the height of the building in the SH Shoreland Overlay District from 2.5 stories or 35 feet to 4 stories or 59 feet (see Table 8).

Table 6. Building Bulk and Height Requirements

	Code Requirement	Proposed
Lot Area	--	44,841 sq. ft. / 1.03 acres
Gross Floor Area	--	103,706 sq. ft.
Floor Area Ratio (Minimum)	Not applicable	Not applicable
Floor Area Ratio (Maximum)	2.5	2.31
Building Height (Maximum)	2.5 stories or 35 ft., whichever is less	4 stories or 59 ft.

Lot Requirements – *Requires variance(s)*

- The applicant has applied for a variance to increase the amount of lot coverage allowed on the site from 70 percent to 75 percent (see Table 9).

Table 7. Lot Requirements Summary

	Code Requirement	Proposed
Dwelling Units (DU)	--	64 DUs
Density (DU/acre)	--	62 DU/acre
Lot Area (Minimum)	5,000 sq. ft. for the residential portion 4,000 sq. ft. for the office portion	44,841 sq. ft.
Impervious Surface Area (Maximum)	85%	84%
Lot Coverage (Maximum)	70%	75%
Lot Width (Maximum)	Not applicable	Not applicable

Yard Requirements – *Requires variance(s)*

- The applicant has applied for a variance to reduce the front yard setbacks along both Clifton Place and Groveland Avenue from 15 feet to a distance ranging between 15 feet and 0 feet (see Table 10).

Table 8. Minimum Yard Requirements

Setback	Zoning District	Overriding Regulations	Total Requirement	Proposed
Front (Clifton Place)	15 ft.	--	15 ft.	Between 6 and 18 ft.
Interior Side (Groveland Avenue)	15 ft.	--	15 ft.	9 ft.
Interior Side (North)	11 ft.	--	11 ft.	16 ft.
Rear (West)	11 ft.	--	11 ft.	15 ft.

Signs – *Not applicable*

- All signs are subject to Chapter 543, On-Premise Signs. The applicant will be required to submit a separate sign permit application for any signage that is proposed.
- In the OR2 zoning district there can be one-and-a-half square feet of signage for every one linear foot of primary building wall. Wall signs are limited to 180 square feet in size. Projecting signs are limited to 12 square feet in size. The height limitation for both wall signs and projecting signs is 14 feet. Freestanding monument signs are limited to 32 square feet in size and can be no taller than 8 feet. The zoning code limits the number of freestanding signs on a zoning lot to one
- The applicant is not proposing any signage at this time.

Screening of Mechanical Equipment – *Meets requirements with Conditions of Approval*

- There will be mechanical equipment located on the roof of the building. The applicant is proposing to screen the rooftop equipment with corrugated metal or something similar. CPED is recommending that whatever material is picked that it meets the requirements of Chapter 535, Regulations of General Applicability.
- There will also be a transformer located on the ground in the northeast corner of the site. While the transformer will be located in a required front yard the applicant is proposing to wrap it so it is visually more appealing. CPED is recommending that the design of the transformer wrap be reviewed and approved by CPED. In addition, CPED is recommending that perennial grasses be planted between the public sidewalk and the transformer for additional screening.

Refuse Screening – *Meets requirements*

- The refuse and recycling containers will be kept inside the building except on pick-up day.

Lighting – *Meets requirements with Conditions of Approval*

- A lighting plan showing footcandles was not submitted as part of the application materials. CPED is recommending that the final lighting plan conform to the standards of Chapter 535, Regulations of General Applicability

Fences – *Meets requirements*

- Fences must comply with the requirements in Chapter 535. The applicant is proposing to have three-foot high decorative metal fencing on top of the retaining wall along the west property line. The proposed fencing meets the standards of the zoning code.

Specific Development Standards – *Not applicable*

SH Shoreland Overlay District Standards – *Requires conditional use permit*

- The applicant has applied for a conditional use permit to increase the height of the building in the SH Shoreland Overlay District from 2.5 stories or 35 feet to 4 stories or 59 feet.

DP Downtown Parking Overlay District Standards – *Not applicable*

3. Conformance with the applicable policies of The Minneapolis Plan for Sustainable Growth.

The Minneapolis Plan for Sustainable Growth identifies the site as urban neighborhood on the future land use map. The proposed development is consistent with the following principles and policies outlined in the comprehensive plan:

> **Urban Design Policy 10.4: Support the development of residential dwellings that are of high quality design and compatible with surrounding development.**

10.4.1 Maintain and strengthen the architectural character of the city's various residential neighborhoods.

10.4.2 Promote the development of new housing that is compatible with existing development in the area and the best of the city's existing housing stock.

Urban Design Policy 10.5: Support the development of multi-family residential dwellings of appropriate form and scale.

10.5.3 Large-scale, high-rise, multi-family residential development is more appropriate in the Downtown Minneapolis Growth Center.

Urban Design Policy 10.6: New multi-family development or renovation should be designed in terms of traditional urban building form with pedestrian scale design features at the street level.

10.6.1 Design buildings to fulfill light, privacy, and view requirements for the subject building as well as for adjacent properties by building within required setbacks.

10.6.2 Promote the preservation and enhancement of view corridors that focus attention on natural or built features, such as the Downtown skyline, landmark buildings, significant open spaces or bodies of water.

10.6.3 Provide appropriate physical transition and separation using green space, setbacks or orientation, stepped down height, or ornamental fencing to improve the compatibility between higher density and lower density residential uses.

10.6.4 Orient buildings and building entrances to the street with pedestrian amenities like wider sidewalks and green spaces.

10.6.5 Street-level building walls should include an adequate distribution of windows and architectural features in order to create visual interest at the pedestrian level.

Urban Design Policy 10.9: Support urban design standards that emphasize traditional urban form with pedestrian scale design features at the street level in mixed-use and transit-oriented development.

10.9.1 Encourage both mixed-use buildings and a mix of uses in separate buildings where appropriate.

10.9.2 Promote building and site design that delineates between public and private spaces.

10.9.4 Coordinate site designs and public right-of-way improvements to provide adequate sidewalk space for pedestrian movement, street trees, landscaping, street furniture, sidewalk cafes and other elements of active pedestrian areas.

4. Conformance with applicable development plans or objectives adopted by the City Council.

The *Loring Park Neighborhood Master Plan* was adopted by the City Council in 2013. The plan designates this site as Mixed Use. In the plan, the site is located in the Loring Hill Land Use and Built Form District. In this district the intention is to maintain its historic character by ensuring that new buildings harmonize with their historic neighbors in terms of height, setback, green space, exterior materials, relationship to the street, the rhythm of windows and doors and rooflines. The proposed development is in conformance with these design intentions.

5. Alternative compliance.

The Planning Commission or zoning administrator may approve alternatives to any site plan review requirement upon finding that the project meets one of three criteria required for alternative compliance. Alternative compliance is requested for the following requirements:

- **Building placement.** The front yard setback requirement along both Clifton Place and Groveland Avenue is 15 feet. The building will be set back between six and 18 feet from the front property line along Groveland Avenue. The building is set back 18 feet from the front property line in the location where the access to the below-ground parking is location. Pulling the building back 18 feet in this location allows a vehicle to pull off of the public sidewalk before entering or exiting the parking garage. CPED is recommending that the Planning Commission grant alternative compliance.
- **Canopy tree count.** The zoning code requires at least one canopy tree for each 500 square feet of required green space be planted on the site. Five canopy trees are required. The applicant is proposing to plant 1canopy tree on the site. In addition, the applicant is proposing to plant eight ornamental trees, 318 perennials and additional ground clover and vines on the site. Since the majority of the site sits above a below-ground parking garage providing five canopy trees, that require adequate planting depth, is difficult. The applicant is providing eight Serviceberry trees on the site that will grow to a height of 20-25 feet in height. CPED is recommending that the Planning Commission grant alternative compliance.

RECOMMENDATIONS

The Department of Community Planning and Economic Development recommends that the City Planning Commission adopt staff findings for the applications by Episcopal Homes for the property located at 1730 Clifton Place:

A. Conditional Use Permit to increase the height of the building.

Recommended motion: **Approve** the application to increase the height of the building in the SH Shoreland Overlay District from 2.5 stories or 35 feet to 4 stories or 59 feet, subject to the following conditions:

1. The conditional use permit shall be recorded with Hennepin County as required by Minn. Stat. 459.3595, subd. 4 before building permits may be issued or before the use or activity requiring a conditional use permit may commence. Unless extended by the zoning administrator, the conditional use permit shall expire if it is not recorded within two years of approval.

B. Variance of the maximum parking requirement.

Recommended motion: **Approve** the application to increase the maximum amount of parking spaces from 94 spaces to 163 spaces.

C. Variance of the maximum lot coverage.

Recommended motion: **Approve** the application to increase the amount of lot coverage allowed on the site from 70 percent to 75 percent.

D. Variance of the front yard setback along Clifton Place.

Recommended motion: **Approve** the application to reduce the front yard setback along Clifton Place from 15 feet to 0 feet, subject to the following conditions:

1. The design of the transformer wrap shall be reviewed and approved by CPED.

2. Perennial grasses shall be planted between the public sidewalk and the transformer for additional screening.

E. Variance of the front yard setback along Groveland Avenue.

Recommended motion: **Approve** the application to reduce the front yard setback along Groveland Avenue from 15 feet to nine feet.

F. Site Plan Review for a new mixed-use building.

Recommended motion: **Approve** the application for a new mixed-use building containing 64 dwelling units and approximately 5,700 square feet of office space, subject to the following conditions:

1. CPED staff shall review and approve the final site, elevation, landscaping, and lighting plans before building permits may be issued.
2. All site improvements shall be completed by January 25, 2018, unless extended by the Zoning Administrator, or the permit may be revoked for non-compliance.
3. To break up the overall length of the retaining wall, the applicant shall terrace portions of it and provide an angled section to create visual interest. The applicant shall also plant vines that will cascade over the top of the retaining wall to further break up its length.
4. There shall be two long-term bicycle parking spaces provided within the parking garage for the office portion of the development.
5. The rooftop mechanical equipment shall be screened per the standards of Chapter 535, Regulations of General Applicability.
6. The design of the transformer wrap shall be reviewed and approved by CPED.
7. Perennial grasses shall be planted between the public sidewalk and the transformer for additional screening.
8. The final lighting plan shall conform to the standards of Chapter 535, Regulations of General Applicability.

ATTACHMENTS

1. Written description and findings submitted by applicant
2. Zoning map
3. Plan sets – civil and architectural
4. Shadow study
5. Renderings
6. Photos
7. Correspondence

Episcopal Commons
1730 Clifton Place

CUNINGHAM
GROUP

Cuningham Group
Architecture, Inc.

St. Anthony Main
201 Main Street SE
Suite 325
Minneapolis, MN
55414

Tel: 612 379 3400
Fax: 612 379 4400

www.cuningham.com

Statement of Proposed Use and Description

Episcopal Commons is a proposed mixed-use development with the vision of combining the existing Episcopal Church in Minnesota (ECMN) offices, St. Mark's Cathedral and new market-rate rental housing for independent seniors developed by Episcopal Homes (EH).

Building Program
Key components of the Project include; Market-rate independent senior living, office space, and parking.

Configuration of the four-story building is as follows:
Sub-level parking in two levels
Apartment, office, and amenity at entry level (Clifton Place) above parking
Apartments in three levels above entry level

Schedule
Project is anticipated to break ground on the day after Easter in 2016 and be completed prior to Easter in 2017.

Apartments
The residence component is anticipated to contain 63 units of market rate housing in a mix of one bedroom, two bedroom and three bedroom units. An additional one (1) guest suite is included on Level 1. Age of residents is anticipated to start at 62 years of age.

Amenity
Proposed amenity includes a management office, community room, small conference room and fitness area on the first level. A clubroom and outdoor living area is contemplated on the fourth level of the building with views toward downtown.

A landscaped terrace/courtyard is also included at the entry level of the building and is designed with active (community) and passive (intimate) zones.

It is anticipated that amenities will be shared among resident and ECMN office populations through an internal agreement.

Mixed-Use
A mixed-use component of approximately 5,850 square feet is proposed for the building consisting of office space(s).

Episcopal Church in MN currently owns and offices on the 1730 Clifton Place site and will move back into the new building upon completion. ECMN and some existing tenants will be relocated off-site while some will relocate into the new office space.

Parking
Parking for the Project is located in two levels below entry level and contains approximately 163 parking stalls of which it is anticipated to provide 1:1 (stall:unit) and the remainder to be owned by St. Mark's. Development team has reached out to other neighborhood entities regarding shared parking arrangements which are still being discussed in terms of need and operations.

Outreach and Process
Through the course of the design process, the team has paid extremely close attention to master planning efforts documented in the Loring Parking Neighborhood Land Use Plan completed on October 18, 2013.

Several meetings have occurred during the past year including discussion with adjacent mansion owners, 510 Groveland, the Women's Club and Citizens for Loring Parking Land Use Committee.

Through these discussions, the overall height of the building was lowered from six stories to four stories in direct response to concerns raised through this process.

Other tenets of the land use plan developed through the current design include engagement of the building with its primary face along Clifton Place that includes pedestrian scaled landscape walk-ups to apartments.

Exterior massing has developed in a manner to continue to break down the height of the building through materials, texture and scale that craft the building into its surroundings. Brick and stone are the predominant exterior materials.

CUNINGHAM
GROUP

Episcopal Commons
1730 Clifton Place

Site Plan Review

Conditional Use Permit (CUP) – Shoreland Overlay Height

1730 Clifton is located south of Loring Pond and has an associated overlay height restriction of 35 feet or 2.5 stories. The proposed height of the building is 58'-11" and four (4) stories.

1. *The establishment, maintenance or operation of the conditional use is not anticipated to be detrimental to or endanger the public health safety, comfort or general welfare.*

2. *The conditional use is not anticipated to be injurious to the use and enjoyment of the other property in the vicinity and will not impede normal and orderly development and improvement of surrounding property for uses permitted in the district.*

3. *Adequate utilities, access roads, drainage, etc exist on the site or are being added with the development.*

4. *Adequate measures have been or will be taken to minimize traffic congestion in the public streets.*

5. *The conditional use is consistent with the applicable policies of the comprehensive plan.*

6. *The conditional use shall, in all other respects, conform to the applicable regulations of the district in which it is located with exception of requested variances described in this narrative.*

Cuningham Group Architecture, Inc.

St. Anthony Main
201 Main Street SE
Suite 325
Minneapolis, MN
55414

Tel: 612 379 3400
Fax: 612 379 4400

www.cuningham.com

Vehicle access is located toward the north end of Clifton Place which is removed from the Groveland/Clifton Place intersection which alleviates that pinch point.

The applicant has also discussed exploration of traffic calming mitigation along Clifton as a future discussion with the neighborhood.

The proposed project is located adjacent to three buildings of more height including 510 Groveland, The Vue and Summit House.

Underlying zoning is OR 2 which permits 56 feet or four (4) stories. Proposed height of the building at 58'-11" inches slightly exceeds the revised zoning height, but is in compliance at four (4) stories and is also consistent with the proposed Land Use Plan developed by the neighborhood.

Over the course of several meetings with Citizens for Loring Park Community Land Use Committee, Women's Club, 510 Groveland residents, and local mansion owners, the project was transformed from six floors to its current four floor configuration.

CUNINGHAM GROUP

Additional CUP for increased building height:

1. *Access to light and air of surrounding properties are not greatly impacted by this proposal.*

2. *Shadowing of residential properties has been minimized during the design process by locating building further from adjacent*

3. *Proposed project is consistent with surrounding scale and character existing uses.*

4. *Proposed project is respectful of adjacent and local significant buildings and landmarks.*

The building adheres to all setbacks adjacent to existing residential buildings. As noted, the overall height of the building was lowered by two floors to continue which helps mitigate light, air and shadow concerns for adjacent property owners. Submitted shadow study demonstrates the anticipated impact.

Careful consideration of scale and character has been considered and implemented in the exterior design of the building. Design principles employed to accommodate this include a breakdown of the massing with form and material that are consistent with the existing neighborhood context and those indicated in the Land Use Plan.

Preservation of landmark buildings
Several adjacent structures are of significance including 510 Groveland, St. Mark's Cathedral, Lyon House and Wurtle House; some of which have local or national historic designation. Care has been taken as to not detract from these structures through the design process.

CUNINGHAM GROUP

Variance – Maximum Building Coverage

1. *1730 Clifton has a unique topography with the crest of the hill at its approximate mid-point which makes vehicle access tenuous. The Land Use Plan calls for parking to be utilized by the neighborhood which proves difficult to locate only below the residential portion of the building for which it was added below the courtyard to maximize parking without impacting green space*

2. *Property use is proposed in a reasonable manner that will be in keeping with the spirit and intent of the ordinance and comprehensive plan by provided mixed-use residential.*

3. *Allowance of the maximum building coverage will not alter character or be injurious to the use or enjoyment of the other properties in the neighborhood, nor will be detrimental to the health, safety or welfare of the general public.*

Overall footprint of the building is designed with 75% lot coverage which exceeds the 70% allowed by zoning. This calculation includes 7,320 square feet of sub-grade parking that has a landscaped courtyard above provided as a physical amenity to the property and visual amenity to the neighboring buildings. Courtyard area accounts for over 20% of the total building footprint which yields an apparent exposed building coverage of approximately 59%. This area generally contains a foot or more of soil and is included as part of the storm water pervious material requirement.

CUNINGHAM
GROUP

Variance – Front Yard Set-backs

1. *The Land Use Plan indicates a desire by future development to engage the street. In effort to maintain distance from significant adjacent properties, the building has been advanced toward the street which is planned with well-appointed landscaping.*

2. *Property use is proposed in a reasonable manner that will be in keeping with the spirit and intent of the ordinance and comprehensive plan by provided mixed-use residential.*

3. *Allowance of the front-yard setback will not alter character or be injurious to the use or enjoyment of the other properties in the neighborhood, nor will be detrimental to the health, safety or welfare of the general public.*

Along Clifton Place and Groveland Avenue, a front yard setback of 1'-0" and 9'-0" respectively are requested in lieu of the required 15'-0" to accommodate a brownstone inspired landscape approach within the setback. Walk-up units, ground planting buffers, street trees and site walls are proposed to add texture and pedestrian scale along the front of the building and provide a contextual, crafted street scape.

Site topography peaks at the entry of the building along Clifton Place and tapers north and south which breaks up the building mass as one moves along the street. This movement creates additional perspective and texture that works in conjunction with the brownstone approach.

CUNINGHAM GROUP

Variance – Maximum Parking

1. *Available parking is a practical difficulty indicated by the neighborhood in the Land Use Plan which requests additional parking. This development will provide additional covered parking to help alleviate this neighborhood issue.*

2. *Property use is proposed in a reasonable manner that will be in keeping with the spirit and intent of the ordinance and comprehensive plan by provided mixed-use residential.*

3. *Allowance of the front-yard setback will not alter character or be injurious to the use or enjoyment of the other properties in the neighborhood, nor will be detrimental to the health, safety or welfare of the general public.*

Loring Hill is currently faced with the challenge of available parking. There are several organizations in the neighborhood that stand to gain additional parking provided by this development including St. Mark's Cathedral, the Women's Club, The Vue in addition to several events that could utilize additional parking.

Parking requirements for the site are limited by the DP Overlay which omits a parking requirement for office uses. Residential parking maximum for 63 units at 1.7 stalls per unit, is 107.

Proposed sub-grade parking configuration accounts for a 1:1 arrangement for sixty three (64) residence units, twelve (12) stalls for the Episcopal Church in MN and the remaining stalls (approximately 87) owned by St. Marks to be utilized by others during non-peak cathedral use for a total 163 parking stalls total for the site.

Parking in excess of the maximum allowed is consistent with the proposed Land Use Plan in its provision as an amenity beyond the use for the project. Operations of the parking are not determined as of this draft, but will be established and maintained by St. Marks in coordination with Episcopal Homes.

Variances within a Shoreland Overlay District

1. A storm water pollution prevention plan will be submitted for purposes of containing erosion control of the site.
2. The view of the proposed building is not detrimental from the protected water.
3. No watercraft are anticipated from the proposed development.

Episcopal Homes **7th**

NAME OF APPLICANT WARD

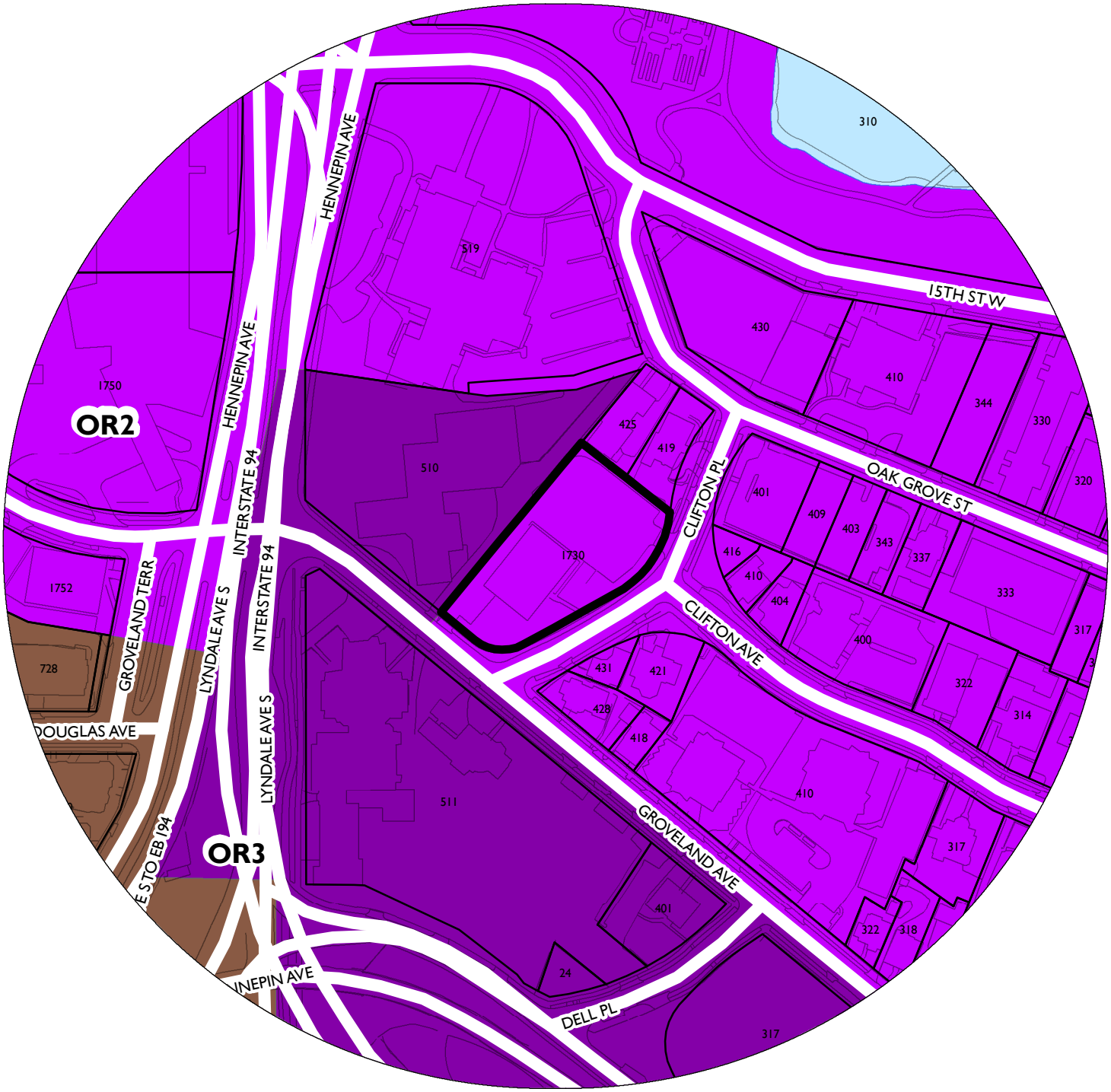

PROPERTY ADDRESS

1730 Clifton Place

FILE NUMBER

BZZ-7542

EPISCOPAL COMMONS
1730 CLIFTON PLACE
MINNEAPOLIS, MN 55403

CUNINGHAM GROUP

Cuningham Group Architecture, Inc.

St. Anthony Main
201 Main St. SE
Suite 325
Minneapolis, MN
55414

Tel: 612 379 3400
Fax: 612 379 4400

www.cuningham.com

Contacts

Client
Name: Episcopal Homes
Contact: Marvin Plakut
Address: 490 East Lynnhurst Avenue, St. Paul, MN 55104
Phone: (651) 632-8801
FAX:
E-Mail: mplakut@ehomesmn.org

Design Architect
Name: Cuningham Group Architecture, Inc.
Contact: Jeffrey Schoeneck
Address: 201 Main St. SE, Suite 325, Minneapolis, MN 55414
Phone: (612) 379-3400
FAX: (612) 379-4400
E-Mail: jschoeneck@cuningham.com

Architect of Record
Name: Trossen Wright Plutowski Architects, P.A.
Contact: Michael Trossen, Jonathan Grothe
Address: 4125 Lakeland Avenue North, Suite 200, Minneapolis, MN 55422
Phone: (763) 533-7171
FAX: (763) 533-7979
E-Mail: mtrossen@twparchitects.com

Civil Engineer
Name: BKBM Engineers
Contact: Keith Matte, Thomas Cesare
Address: 5930 Brooklyn Boulevard, Minneapolis, MN 55429
Phone: (763) 843-0420
FAX: (763) 843-0421
E-Mail: kmatte@bkbm.com

Landscape Architect
Name: Cuningham Group Architecture, Inc.
Contact: David Motzenbecker
Address: 201 Main St. SE, Suite 325, Minneapolis, MN 55414
Phone: (612) 379-3400
FAX: (612) 379-4400
E-Mail: dmotzenbecker@cuningham.com

PDR / LAND USE APPLICATION SUBMITTAL 12/11/2015

Graphic Symbols

DRAWING TITLE
NUMBER ON SHEET
DRAWING TITLE
1 / A101 View Name 1/8" = 1'-0"
DRAWING SCALE
SHEET NUMBER

WALL SECTION / DETAIL
DRAWING NUMBER
SHEET ON WHICH THE SECTION OCCURS

STRUCTURAL GRID LINE
0 0

DOOR
REFERENCES DOOR SCHEDULE
1234 E.01 - HW
DOOR NUMBER
HARDWARE CODE
DOOR TYPE
FIRE LABEL

CEILING FINISH
REFERENCES COLOR AND FINISH SCHEDULE
10'-0" — HEIGHT
PT-X — FINISH
ACT-X — MATERIAL

EXTERIOR ELEVATION
1 / A100
DRAWING NUMBER
SHEET ON WHICH THE ELEVATION OCCURS

INTERIOR ELEVATION
1 2 3 4 A701
DRAWING NUMBER
SHEET ON WHICH THE ELEVATION OCCURS

BUILDING SYSTEM
REFERENCES BUILDING SYSTEMS TYPE SCHEDULE
W XXX-X
SYSTEM TYPE PER SCHEDULE
EXTENT OF SYSTEM

MATCHLINE
1 / A101
1 / A101

FIRE EXTINGUISHERS
F A10 SH
A5 = 5 LB ABC EXTINGUISHER
A10 = 10 LB ABC EXTINGUISHER
EX = EXISTING EXTINGUISHER
EX = EXISTING CABINET OR HOOK
S = SURFACE MOUNTED CABINET
SH = SURFACE MOUNTED HOOK
SR = SEMI RECESSED CABINET
R = RECESSED CABINET

FINISHES / FURNITURE / EQUIPMENT
XX-##
TYPE PER SCHEDULE

BUILDING SECTION
DRAWING NUMBER
SHEET ON WHICH THE SECTION OCCURS

DETAIL
1 / A101 SIM
DRAWING NUMBER
SHEET ON WHICH THE DETAIL OCCURS

ROOM
ROOM NAME
101 — ROOM NUMBER

INTERIOR PARTITION
REFERENCES PARTITION TYPE SCHEDULE
A3 1
PARTITION TYPE PER SCHEDULE
PARTITION MODIFIER

WINDOW FRAME TYPE
REFERENCES WINDOW FRAME TYPE SCHEDULE(S)
1t — FRAME TYPE PER SCHEDULE

LOUVER FRAME TYPE
REFERENCES LOUVER FRAME TYPE SCHEDULE(S)
1t — FRAME TYPE PER SCHEDULE

FLOOR FINISH TRANSITION
REFERENCES COLOR AND FINISH SCHEDULE
FLR-X FLR-X
FLOORING TYPES PER SCHEDULE

COMPASS ROSE
N
PROJECT NORTH
TRUE NORTH

HEIGHT/ELEVATION BENCHMARKS

KEYNOTE
REFERENCES SHEET KEYNOTE LEGEND
1 1 1

REVISION
1

DATUMS - WORKPOINT AND CENTER POINT
WP CP

FIXTURE / EQUIPMENT (ELEVATION)
C
C = CLOCK
D = SMOKE DETECTOR
E = ELECTRICAL
S = SPEAKER
T = THERMOSTAT

Abbreviations

AB AIR BARRIER
AC ACCESSORY
ACP ACOUSTICAL CEILING PANEL
ACR ACRYLIC
ACT ACOUSTICAL CEILING TILE
ADA AMERICANS WITH DISABILITIES ACT
ADH ADHERE
AFF ABOVE FINISHED FLOOR
ALB ALUMINUM BASE
ALT ALTERNATIVE / ALTERNATE
ALUM ALUMINUM
AR ARTWORK
ARCH ARCHITECT
AWT ACOUSTICAL WALL TREATMENT

BLKG BLOCKING
BO BOTTOM OF
BRG BEARING
BRK BRICK
BT TABLE BASE

CB CHALK BOARD
CCF COLUMN COVER FINISH
CF CUSTOM FABRICATION
CF/OI CONTRACTOR FURNISHED / OWNER INSTALLED
CG CORNER GUARD
CGA CUNINGHAM GROUP ARCHITECTURE, INC.
CH CHAIR
CJ CONTROL JOINT
CK CORK
CL CENTER LINE
CLR CLEAR(ANCE)
CMU CONCRETE MASONRY UNIT
CONC CONCRETE
CONT CONTINUOUS / CONTINUE
CP COMPOSITE PANEL
CPT CARPET(ED)
CPTB CARPET BASE
CPTT CARPET TILE
CT CERAMIC / PORCELAIN TILE
CTB CERAMIC TILE BASE

DEC DECORATIVE CONCRETE
DF DRINKING FOUNTAIN
DG DECORATIVE GLASS
DIA DIAMETER
DIV DIVISION
DN DOWN
DRP DRAPERY/CURTAINS
DWGS DRAWINGS

(E) / EXIST EXISTING
EJ EXPANSION JOINT
EL ELEVATION
ELEC ELECTRIC(AL)
EPOX EPOXY PAINT
EQ EQUAL
EWC ELECTRICAL WATER COOLER
EXP EXPOSED
EXT EXTERIOR

FD FLOOR DRAIN
FE / FEC FIRE EXTINGUISHER (CABINET)
FF / FFE FINISH FLOOR (ELEVATION)
FF&E FIXTURES, FURNISHINGS & EQUIPMENT
FIN FINISH
FL / FLR FLOOR(ING)
FOEW FACE OF EXISTING WALL
FOS FACE OF STUD
FRP FIBERGLASS REINFORCED WALL PANEL

GA GAUGE
GALV GALVANIZED
GB GYPSUM BOARD
GFRC GLASS FIBER REINFORCED CONCRETE
GFRG GLASS FIBER REINFORCED GYPSUM
GL GLASS, GLAZING
GMU GLAZED MASONRY UNIT

GT GLASS TILE
GWT GLAZED WALL TILE
GYP GYPSUM

HB HOSE BIBB
HDBD HARDBOARD
HDWD HARD WOOD
HDWR HARDWARE
HM HOLLOW METAL
HSS HOLLOW STEEL SECTION

ID INSIDE DIAMETER
INSUL INSULATION
INT INTERIOR

L LIGHT FIXTURE
LIN LINOLEUM
LMC LINEAR METAL CEILING
LWC LINEAR WOOD CEILING

MAS MASONRY
MAT INSET CARPET/WALK-OFF MAT
MATL MATERIAL
MAX MAXIMUM
MB MARKER BOARD
MDF MEDIUM DENSITY FIBERBOARD
MECH MECHANICAL
MG METAL GRATE
MIN MINIMUM
MIR MIRROR(ED)
MO MASONRY OPENING
MTD MOUNTED
MTL METAL

NA NOT APPLICABLE
NIC NOT IN CONTRACT

OC ON CENTER(S)
OD OUTSIDE DIAMETER
OF/CI OWNER FURNISHED / CONTRACTOR INSTALLED
OF/OI OWNER FURNISHED / OWNER INSTALLED
OFRD OVERFLOW ROOF DRAIN
OFS OVERFLOW SCUPPER
OH OVERHEAD
OPNG OPENING
OZ OUNCE

PARTBD PARTICLEBOARD
PL PLATE
PLAM PLASTIC LAMINATE
PLY PLYWOOD
PME PATCH TO MATCH EXISTING
PNL PANEL
PREFIN PREFINISHED
PRV POWER ROOF VENTILATOR
PT PAINT(ED)

QT QUARRY TILE
QTB QUARRY TILE BASE
QTY QUANTITY

R RISER
RAD RADIUS
RB RUBBER BASE / RESILIENT BASE
RD ROOF DRAIN
REF REFERENCE / REFER TO
REQD REQUIRED
RES EPOXY RESIN FLOORING
RESB EPOXY RESIN FLOORING BASE
RFL RUBBER FLOOR / RESILIENT FLOORING
RO ROUGH OPENING
RT RESILIENT TILE
RTR RESILIENT TRANSITION STRIP
RTU ROOF TOP UNIT
RW REFINISHED WOOD

S SEATING
SC SEALED CONCRETE
SF SQUARE FOOT/FEET
SIM SIMILAR
SP SPECIALTY FINISH

SPF SPRAY POLYURETHANE FOAM
SPT SPECIAL PAINT
SS STAINLESS STEEL
SSF SOLID SURFACE
ST STAIN
STC STAINED CONCRETE
STN STONE
STNB STONE BASE
STNV STONE VENEER
SUSP SUSPENDED
SV SHEET VINYL
SYST SYSTEM

T TREAD / TABLE
T&G TONGUE AND GROOVE
TA TABLE
TB TACKBOARD
TEP TRANSITION EDGE PROFILE
TERB TERRAZZO BASE
TERR TERRAZZO
TEX TEXTURE
TF TENSION FABRIC
TFC TEXTURED FINISH CEILING
TOB TOP OF BEAM
TOC TOP OF CONCRETE
TOD TOP OF DECK
TOF TOP OF FOOTING
TOP TOP OF PARAPET
TOS TOP OF STEEL
TOW TOP OF WALL
TPART TOILET PARTITION
TT TERRAZZO TILE
TYP TYPICAL

UNFIN UNFINISHED
UNO UNLESS NOTED OTHERWISE
UPH UPHOLSTERY

VB VINYL BASE
VCT VINYL COMPOSITION TILE
VIF VERIFY IN FIELD
VIN VINYL
VNR VENEER
VP VENEER PLASTER
VR VAPOR RETARDER
VSE VENEER SHELF ELEVATION
VT VINYL TILE
VWC VINYL WALL COVERING

WB WEATHER BARRIER
WC WALL COVERING
WD WOOD
WDB WOOD BASE
WDV WOOD VENEER
WDW WINDOW
WF WOOD FLOORING
WP WORK POINT
WPT WALL PROTECTION
WT WINDOW TREATMENT
WWC WOOD WALLCOVERING

XPS EXTRUDED POLYSTYRENE

NUMBER / POUND
& AND
@ AT

General Notes

1. Do Not Scale Drawings

2. Street lighting installed as part of the Project shall be inspected by the City. Contractors shall arrange for inspections with the Traffic Department, please contact Dave Prehall at (612) 6735759 for further information. Any lighting installations not meeting City specifications will be required to be reinstalled at Owner expense.

3. An obstruction permit is required anytime construction work is performed in the Public right-ofway. Please contact Scott Kramer at (612) 673-2383 regarding details of sidewalk and lane closures. Log on to http://minneapolis.mn.roway.net/ for a permit.

4. Contact Allan Klugman at (612) 673-2743 prior to construction for the temporary removal/temporary relocation of any City of Minneapolis signal system that may be in the way of construction.

5. All costs for relocation and/or repair of City Traffic facilities shall be borne by the Contractor and/or Property Owner.

6. Contact Doug Maday at (612) 673-5755 prior to construction for the removal of any City of Minneapolis right of way signs that may be in the way of construction.

7. No construction, demolition or commercial power maintenance equipment shall be operated within the city between the hours of 6:00 p.m. and 7:00 a.m. on weekdays or during any hours on Saturdays, Sundays and state and federal holidays, except under permit. Contact Environmental Services at 612-673-3867 for permit information.

8. Permits and approval are required from Environmental Services for the following activities: Temporary storage of impacted soils on site prior to disposal or reuse; Reuse of impacted soils on site; Dewatering and discharge of accumulated storm water or ground water, underground or aboveground tank installation or removal, well construction or sealing. Contact Tom Frame at 612-673-5807 for permit applications and approvals.

Project Description

GOVERNING CODE: 2012 IBC WITH MINNESOTA AMENDMENTS

BUILDING TYPE: TYPE I A - Sublevel 1 & 2; TYPE V A - Levels 1-4

PRIMARY OCCUPANCY TYPE: GROUP R-2 with S-2 Parking below grade, 63 Residential Units

NEW CONSTRUCTION (SF): 170,535 SF

CONSTRUCTION MATERIALS: Sublevels G1 - G2: Slab on grade at Sublevel 2. Cast-in place concrete columns with Post-Tensioned Concrete Slab and CMU foundation walls with a stone veneer where exposed.

Level 1: Cast-in place concrete columns with Post-Tensioned Concrete Slab at Office area and Wood-framed structure at the Residence with brick masonry finishes on wood framing back-up. Architectural windows with low-e glass.

Level 2 - Roof: Wood framing structure with brick masonry finish. Architectural windows with low-e glass.

PROGRAM DESCRIPTION: Four story apartment building with approx. 10,000 SF of Office at Level 1, and 2 levels of below-grade parking.

Building amenities include a Community Room, Fitness room, Courtyard, and a Level 4 Clubroom with roof patio.

Materials

ALUMINUM
BRICK
CERAMIC TILE / RESILIENT TILE
CONCRETE - CAST-IN-PLACE
CONCRETE - PRECAST
CONCRETE BLOCK
EARTH
EXISTING CONDITIONS
WOOD - FINISHED
GLASS
GRAVEL/STONE FILL
GYPSUM WALL BOARD
INSULATION - BATT
INSULATION - RIGID
PARTICLE BOARD
PLASTER / GROUT
PLYWOOD
ROUGH LUMBER / WOOD FRAMING
WOOD BLOCKING
SAND / GRANULAR FILL
STONE
STEEL / STEEL STUD FRAMING
TERRAZZO

Sheet Index

PDR Resubmittal 11/20/2015 | Land Use Application 12/11/2015 | Sheet Number | Sheet Name

X023 Biships Offices - color and Finish Schedule
XA EXHIBIT A - SETBACK DIMENSION PLAN

Architectural
A700 Finish Schedule

General
• • G001 General Information
• • R001 Site Context Plan
• SURVEY Survey

Civil
• • C100 Demolition and Erosion Control
• • C200 Grading, Drainage, and Erosion Control
• • C300 Utility Plan
• • C400 Paving and Geometric Plan
• • C500 Civil Details Sheet
• • C501 Civil Details Sheet
• • C600 Stormwater Pollution Prevention Plan

Landscape
• • L100 Site and Planting Plan

Architectural
• • A100 Subgrade Level S2 Floor Plan
• • A101 Subgrade Level S1 Floor Plan
• • A110 Level 1 Floor Plan
• • A120 Level 2 Floor Plan
• • A130 Level 3 Floor Plan
• • A140 Level 4 Floor Plan
• • A200 Roof Plan
• • A300 Exterior Elevations
• • A301 Exterior Elevations - Courtyard
• A302 Exterior Elevations - Color
• • A400 Building Sections

GROSS BUILDING AREA

Level	Area
Level S2	33,700 SF
Level S1	32,900 SF
Level 1	25,878 SF
Level 2	26,434 SF
Level 3	26,507 SF
Level 4	24,887 SF
Grand total: 6	170,306 SF

RESIDENTIAL UNIT SUMMARY

Unit Type	Level 1	Level 2	Level 3	Level 4	Total
1 BED	1	4	5	5	15
1 BED + DEN	2	2	2	2	8
2 BED	10	8	8	8	30
2 BED + DEN	0	2	2	2	6
3 BED	0	1	1	0	2
GUEST ROOM	0	0	0	0	1
STUDIO	0	0	1	1	2
Grand total	9	17	19	18	64

PARKING STALL SUMMARY

Stall Type	Subgrade Level 1	Subgrade Level 2	Total
OFFICE / CHURCH			
ACCESSIBLE	5	0	5
COMPACT	7	18	25
STANDARD	4	65	69
	16	83	99
RESIDENTIAL			
ACCESSIBLE	2	0	2
COMPACT	12	0	12
STANDARD	50	0	50
	64	0	64
Grand total	80	83	163

Consultant

TROSSEN WRIGHT PLUTOWSKI ARCHITECTS, PA
4125 Lakeland Ave. N.
Suite 200
Minneapolis, MN 55422

Phone: (763) 533-7171
Fax: (763) 533-7979

Revisions
No. Date Description

PDR / LAND USE APPLICATION SUBMITTAL

Document Phase:
Date: 12/11/2015
PIC / AIC: JSchoeneck
Drawn By:
Checked By:
Comm. No.: 11-1174

Project Title
EPISCOPAL COMMONS

Sheet Title
General Information

Sheet Number
G001

Copyright © 2014 by Cuningham Group Architecture, Inc. (All Rights Reserved)

C:\RevitLocal\11-1174_CliftonPlace-Central_eanderson.rvt
12/30/2015 11:02:00 AM

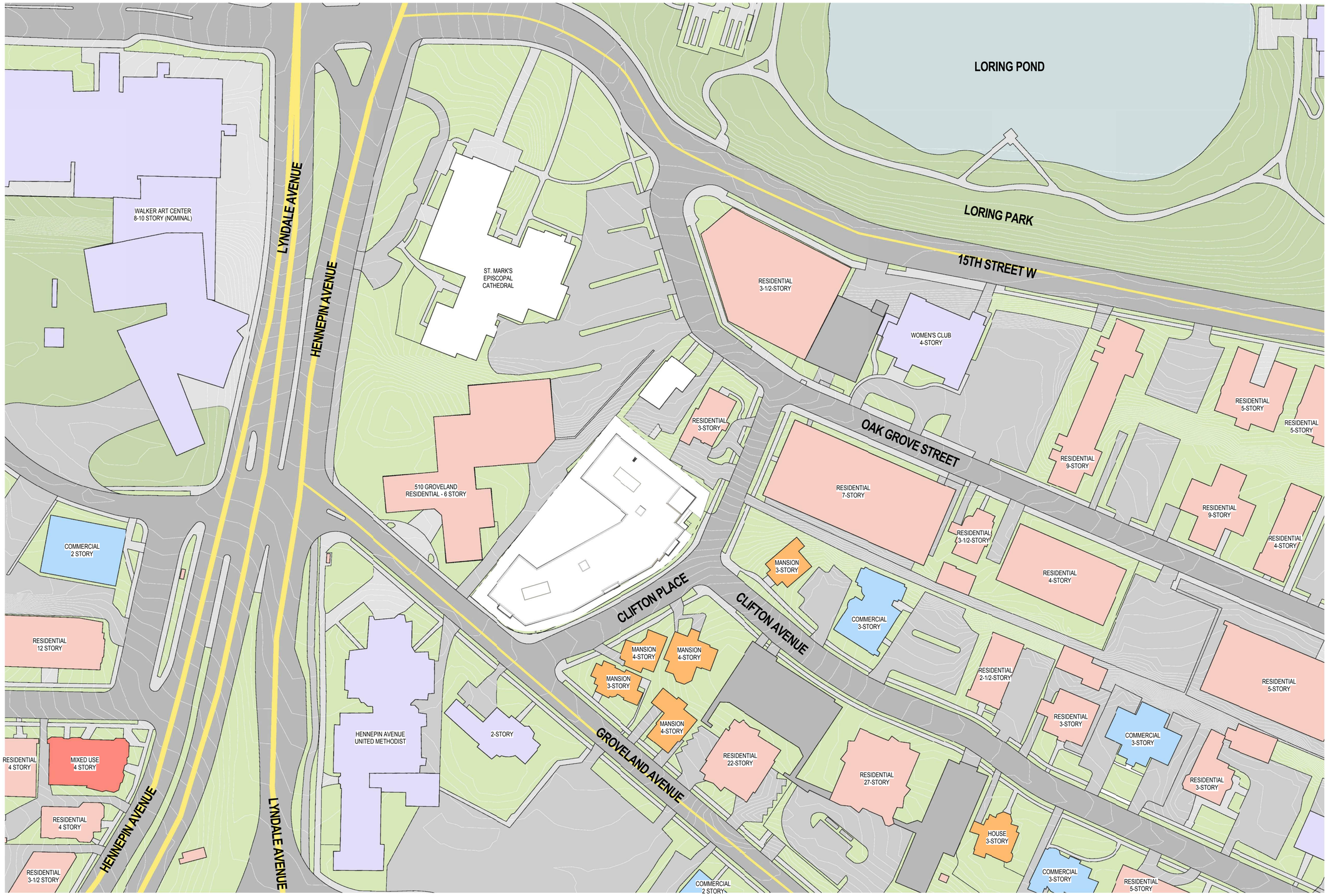

1 / R001 **Context Plan**
1" = 50'-0"

CUNINGHAM GROUP

Cuningham Group Architecture, Inc.

St. Anthony Main
201 Main St. SE
Suite 325
Minneapolis, MN
55414

Tel: 612 379 3400
Fax: 612 379 4400

www.cuningham.com

Consultant

TROSSEN WRIGHT PLUTOWSKI ARCHITECTS, PA

4125 Lakeland Ave. N.
Suite 200
Minneapolis, MN 55422

Phone: (763) 533-7171
Fax: (763) 533-7979

Revisions

No.	Date	Description

PDR / LAND USE APPLICATION SUBMITTAL

Document Phase:	
Date:	12/11/2015
PIC / AIC:	JSchoeneck
Drawn By:	Author
Checked By:	Checker
Comm. No.:	11-1174

Project Title

EPISCOPAL COMMONS

Sheet Title

Site Context Plan

Sheet Number

R001

Copyright © 2014 by Cuningham Group Architecture, Inc. (All Rights Reserved)

C:\Revit\Local\11-1174_OfficePlace-Central_jschoeneck

12/11/2015 1:45:29 PM

ALTA/ACSM LAND TITLE SURVEY FOR:
EPISCOPAL HEALTH & HOUSING SERVICES

0 20 40 60
SCALE IN FEET

FOUND IRON MONUMENT
FOUND NAIL
SET IRON MONUMENT MARKED WITH LICENSE NUMBER 44123

LEGEND

- MANHOLE
- CATCH BASIN
- WATER MANHOLE
- HYDRANT
- TELEPHONE MANHOLE
- COMMUNICATION BOX
- WINDOW WELL
- VENT PIPE
- PVC PIPE
- SUPPORT POST
- UTILITY VAULT
- SIGN
- GUARD POST
- HANDICAPPED PARKING SPACE
- HANDICAPPED PARKING SIGN
- ELECTRIC BOX
- ELECTRIC METER
- AIR CONDITIONER
- LIGHT
- UTILITY POLE
- OVERHEAD WIRE
- FLAGSTONE/BLOCK WALL
- CONCRETE WALL
- SANITARY SEWER
- STORM SEWER
- WATERMAIN
- UNDERGROUND ELECTRIC
- UNDERGROUND GAS
- UNDERGROUND TELEPHONE
- SPOT ELEVATION
- EXISTING CONTOUR LINE
- BITUMINOUS SURFACE
- CONCRETE SURFACE

VICINITY MAP
NOT TO SCALE

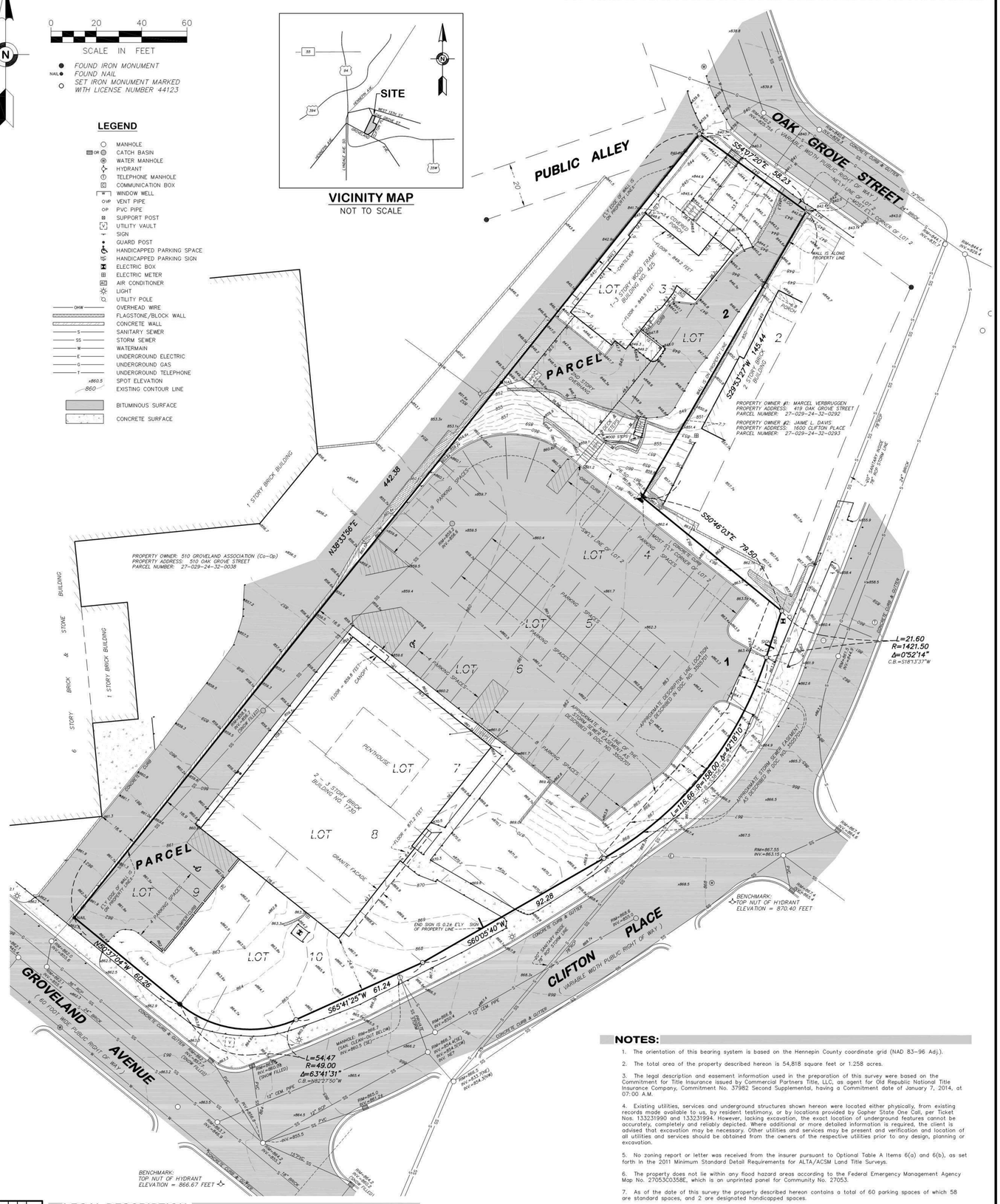

NOTES:

1. The orientation of this bearing system is based on the Hennepin County coordinate grid (NAD 83-96 Adj.).
2. The total area of the property described hereon is 54,818 square feet or 1.258 acres.
3. The legal description and easement information used in the preparation of this survey were based on the Commitment for Title Insurance issued by Commercial Partners Title, LLC, as agent for Old Republic National Title Insurance Company, Commitment No. 37982 Second Supplemental, having a Commitment date of January 7, 2014, at 07:00 A.M.
4. Existing utilities, services and underground structures shown hereon were located either physically, from existing records made available to us, by resident testimony, or by locations provided by Gopher State One Call, per Ticket Nos. 133231990 and 133231994. However, lacking excavation, the exact location of underground features cannot be accurately, completely and reliably depicted. Where additional or more detailed information is required, the client is advised that excavation may be necessary. Other utilities and services may be present and verification and location of all utilities and services should be obtained from the owners of the respective utilities prior to any design, planning or excavation.
5. No zoning report or letter was received from the insurer pursuant to Optional Table A Items 6(a) and 6(b), as set forth in the 2011 Minimum Standard Detail Requirements for ALTA/ACSM Land Title Surveys.
6. The property does not lie within any flood hazard areas according to the Federal Emergency Management Agency Map No. 27053C0358E, which is an unprinted panel for Community No. 27053.
7. As of the date of this survey the property described hereon contains a total of 60 parking spaces of which 58 are standard spaces, and 2 are designated handicapped spaces.
8. Adjacent property owners, addresses, and parcel numbers shown hereon were obtained from the Hennepin County Property Information Web Site.
9. As of the date of this survey there is no observable evidence of earth moving work, building construction or building additions within recent months on the property described hereon. Also, there was no observable evidence of recent street or sidewalk construction or repairs that affect the property described hereon.
10. As of the date of this survey there is no observable evidence that the property described hereon is being used as a solid waste dump, sump or sanitary landfill.
11. As of the date of this survey no information was available regarding completed or proposed changes in street right-of-way lines. As of the date of this survey there is no observable evidence of recent street or sidewalk construction or repairs that affect the property described hereon.
12. Pursuant to the U.S. Fish & Wildlife Service, National Wetlands Inventory there are no wetlands on subject property.
13. At the time of this certification no division or party walls were designated by the client with respect to adjoining properties pursuant to Item 10(a), and 10(b), as set forth in the 2011 Minimum Standard Detail Requirements for ALTA/ACSM Land Title Surveys.

CERTIFICATION:

To: Trustees of the Diocese of Minnesota, Incorporated, a Minnesota non-profit religious corporation; The Cathedral Church of St. Mark, a Minnesota religious corporation; the Secretary of Housing and Urban Development, their successors and/or assigns, as their interests may appear; Commercial Partners Title, LLC; and Old Republic National Title Insurance Company:

This is to certify that this map or plat and the survey on which it is based were made in accordance with the 2011 Minimum Standard Detail Requirements for ALTA/ACSM Land Title Surveys, jointly established and adopted by ALTA and NSPS, and includes Items 1, 2, 3, 4, 5, 6(a), 6(b), 7(a), 8, 9, 10(a), 10(b), 11(b), 12, 13, 16, 17, 18, 19, and 20(a) of Table A thereof. The field work was completed on December 13, 2013.

Date of Plat or Map: December 13, 2013.

Brent R. Petersen
Minnesota License No. 44123

NO.	DATE	DESCRIPTION

REVISIONS

LEGAL DESCRIPTION:

Parcel 1:

Lots 4, 5, 6, 7, 8, 9 and 10, Block 2, J.S. Johnson's Subdivision of Lots P, Q, R, S and T of J.S. Johnson's Addition to Minneapolis, Hennepin County, Minnesota.

Parcel 2:

Lot 3, and all that part of Lot 2 lying Northwesterly of a line drawn from a point on the Northeasterly line of said Lot, 19 feet Northwesterly along said Northeasterly line from most Easterly corner of said Lot to a point on the Southwesterly line of said Lot, 26 1/2 feet along said Southwesterly line from the most Southerly corner of said Lot, all in Block 2, J.S. Johnson's Subdivision of Lots P, Q, R, S and T of Johnson's Addition, Hennepin County, Minnesota.

Abstract Property

SURVEY ITEMS PER SCHEDULE B:

ITEM 10: Easement for storm sewer purposes, in favor of State of Minnesota, as created in document dated July 30, 1964, filed October 21, 1964, in Book 2464, Page 445, as Document No. 3505701. (Parcel 1)

The easement line described in said document is depicted on the survey based on the location of Lot 15, Block 3, J. S. Johnsons Subdivision of Lots P, Q, R, S, and T, of Johnsons Addition as shown within the plat.

FIELD BOOK	PAGE
2587	59

FIELDWORK CHIEF: T.H.
DRAWN BY: kgf
CHECKED BY: BRP
DRAWING NAME: 35749.dwg
JOB NO. 35759
FILE NO. 440

ALTA/ACSM LAND TITLE SURVEY

SURVEY FOR: EPISCOPAL HEALTH & HOUSING SERVICES

PROPERTY ADDRESS: 425 OAK GROVE STREET & 1730 CLIFTON PLACE MINNEAPOLIS, MN 55403

Egan, Field & Nowak, Inc.
land surveyors since 1872
1229 Tyler Street NE, Suite 100
Minneapolis, Minnesota 55413
PHONE: (612) 466-3300
FAX: (612) 466-3383
WWW.EFNSURVEY.COM
COPYRIGHT © 2013 By EGAN, FIELD & NOWAK, INC.

SHEET 1 OF 1

Printed: 12/12/2014 @ 12:43 PM by Brent Petersen

CUNINGHAM GROUP

Cuningham Group Architecture, Inc.
50 South Tenth St.
201 Nicollet Mall
Suite 325
Minneapolis, MN
55414
Tel: 612.370.3400
Fax: 612.370.4400
www.cuninghamgroup.com

Consultant

TROSSEN WRIGHT PLUTOWSKI ARCHITECTS, PA
4125 Lakeland Ave. N.
Suite 200
Minneapolis, MN 55422
Phone: (763) 533-7171
Fax: (763) 533-7979

Revisions
No. Date Description

PDR / LAND USE APPLICATION SUBMITTAL

Document Phase:
Date: 12/11/2015
PC / A/C: JSchoenick
Drawn By: SRH
Checked By: JAS
Comm. No.: 11-1174
Project Title: EPISCOPAL COMMONS

Sheet Title: Survey

Sheet Number: SURVEY

Copyright © 2014 by Cuningham Group Architecture, Inc. All Rights Reserved.

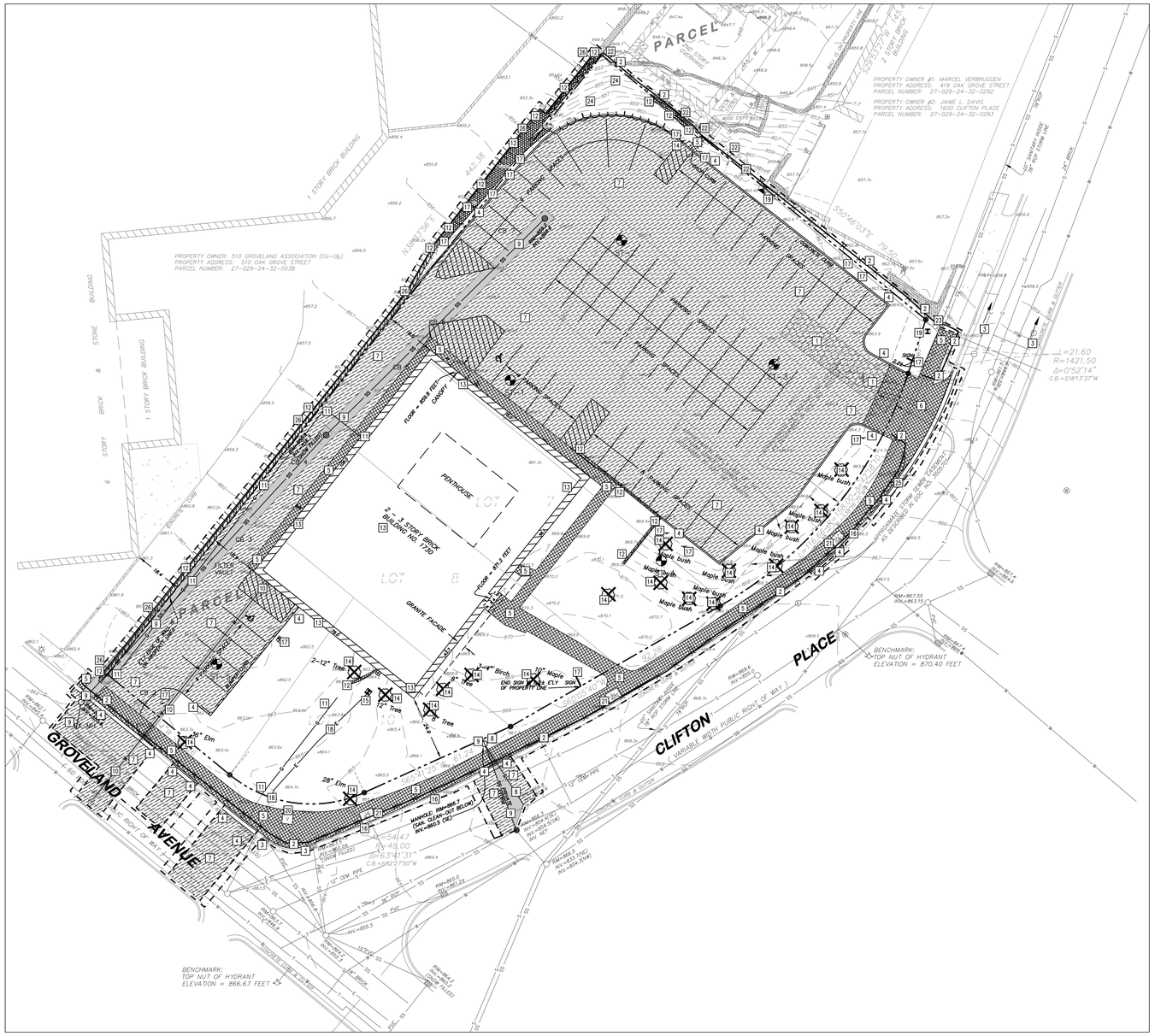

1 C100 DEMOLITION AND EROSION CONTROL PLAN
1"=20'

PROPOSED PLAN SYMBOLS
CONSTRUCTION LIMITS
SEDIMENT CONTROL (SILTATION FENCE)
SEDIMENT CONTROL (BIO-ROLL)
PROPERTY LINE
SAWCUT LINE (APPROX.)
ROCK CONSTRUCTION ENTRANCE
BITUMINOUS REMOVAL
CONCRETE REMOVAL
PIPE REMOVAL
TREE REMOVAL

ABBREVIATIONS	
BLDG	Building
BM	Bench Mark
CB	Catch Basin
CONC	Concrete
DIP	Ductile Iron Pipe
ELEV	Elevation
EX	Existing
FFE	Finished Floor Elevation
INV	Invert
MAX	Maximum
MH	Manhole
MIN	Minimum
PVC	Polyvinyl Chloride
RCP	Reinforced Concrete Pipe

APPROXIMATE DISTURBED AREA IS 1.26 ACRES

NOTE:
STORM SEWER INLETS NOT SHOWN ON PLAN MAY RECEIVE RUNOFF FROM CONSTRUCTION ACTIVITIES. INSTALL INLET SEDIMENT PROTECTION PER DETAIL 3/C500 ON ALL STORM INLETS THAT MAY RECEIVE RUNOFF.

N

20' 10' 0 20' 40'
SCALE 1" = 20'

KEYED NOTES

KEYED NOTES ARE DENOTED BY NO ON PLAN.

1. INSTALL ROCK CONSTRUCTION ENTRANCE. REFER TO DETAIL 1/C500.
2. INSTALL SEDIMENT CONTROL. REFER TO DETAIL 2/C500.
3. INSTALL INLET SEDIMENT PROTECTION. REFER TO DETAIL 3/C500.
4. REMOVE CURB AND GUTTER IN ITS ENTIRETY TO THE EXTENT SHOWN. SAWCUT AND REMOVE AT NEAREST JOINT.
5. REMOVE EXISTING SIDEWALK/STAIRS. SAWCUT AND REMOVE AT NEAREST JOINT. CURB AND GUTTER IN STREET TO REMAIN. DAMAGED CURB IS TO BE REPLACED PER CITY STANDARDS.
6. REMOVE EXISTING CONCRETE DRIVE ENTRANCE IN ITS ENTIRETY.
7. REMOVE BITUMINOUS PAVEMENT IN ITS ENTIRETY TO THE EXTENTS SHOWN.
8. REMOVE SANITARY SEWER IN ITS ENTIRETY TO THE EXTENTS SHOWN. FOLLOW ALL CITY OF MINNEAPOLIS STANDARDS AND SPECIFICATIONS.
9. REMOVE 8-INCH VCP STORM DRAIN, EXISTING MANHOLES, AND 15" STORM TO EXISTING MANHOLE IN STREET. PLUG AND GROUT SEAL MANHOLES IN ACCORDANCE WITH CITY OF MINNEAPOLIS STANDARDS AND SPECIFICATIONS.
10. EXISTING WATER SERVICE TO BE DISCONNECTED AND REMOVED TO THE EXTENTS SHOWN. FOLLOW ALL CITY OF MINNEAPOLIS STANDARDS AND SPECIFICATIONS.
11. NATURAL GAS SERVICE IS TO BE DISCONNECTED TO THE EXTENTS SHOWN. COORDINATE DISCONNECTION OF SERVICES WITH LOCAL NATURAL GAS UTILITY.
12. REMOVE EXISTING RETAINING WALL IN ITS ENTIRETY.
13. DEMOLISH AND RAZE EXISTING BUILDING IN ITS ENTIRETY, INCLUDING FOUNDATIONS. COORDINATE DISCONNECTION AND REMOVAL OF ALL SMALL UTILITIES WITH UTILITY OWNERS.
14. REMOVE EXISTING TREE IN ITS ENTIRETY, INCLUDING STUMP.
15. REMOVE ELECTRICAL TRANSFORMER AND CONCRETE PAD IN ITS ENTIRETY. COORDINATE DISCONNECTION AND REMOVAL WITH UTILITY OWNER.
16. EXISTING TRAFFIC CONTROL SIGN IS TO REMAIN. PROTECT AT ALL TIMES. REPLACE IF NEEDED PER CITY STANDARDS.
17. REMOVE SIGN. CONTACT OWNER TO DETERMINE WHETHER TO SALVAGE AND STORE FOR REUSE OR DISPOSAL.
18. EX. UNDERGROUND ELECTRIC SERVICE TO EX. BUILDING IS TO BE DISCONNECTED. COORDINATE DISCONNECTION OF ELECTRIC SERVICE WITH LOCAL ELECTRIC UTILITY.
19. EXISTING ELECTRICAL TRANSFORMER TO REMAIN. PROTECT AT ALL TIMES DURING CONSTRUTION
20. EXISTING UTILITY VAULT TO REMAIN. PROTECT AT ALL TIMES DURING CONSTRUCTION.
21. EXISTING STREET LIGHT POLES TO REMAIN. PROTECT AT ALL TIMES DURING CONSTRUCTION.
22. EXISTING TREE TO REMAIN. PROTECT ALL ALL TIMES DURING CONSTRUCTION.
23. EXISTING OVERHEAD ELECTRIC POWER POLE TO REMAIN. PROTECT AT ALL TIMES DURING CONSTRUCTION.
24. CLEAR AND GRUB VEGETATED AREA LOCATED IN NORTHWEST CORNER OF PROPERTY. WORK TO BE DONE WITHIN PROPERTY ONLY. DO NOT REMOVE ANY TREES OR OTHER VEGETATION OUTSIDE OF PROPERTY LINES.
25. REMOVE TRAFFIC CONTROL SIGN. RELOCATE SIGN IN ACCEPTABLE LOCATION PER CITY STANDARDS.
26. INSTALL SEDIMENT CONTROL. REFER TO DETAIL 2/C200.

MINNEAPOLIS CONSTRUCTION NOTES:

1. STREET LIGHTING INSTALLED AS PART OF THE PROJECT SHALL BE INSPECTED BY THE CITY. CONTRACTORS SHALL ARRANGE FOR INSPECTIONS WITH THE TRAFFIC DEPARTMENT, PLEASE CONTACT DAVE PREHALL AT (612) 673-5759 FOR FURTHER INFORMATION. ANY LIGHTING INSTALLATIONS NOT MEETING CITY SPECIFICATIONS WILL BE REQUIRED TO BE REINSTALLED AT OWNER EXPENSE.
2. AN OBSTRUCTION PERMIT IS REQUIRED ANYTIME CONSTRUCTION WORK IS PERFORMED IN THE PUBLIC RIGHT-OFWAY. PLEASE CONTACT SCOTT KRAMER AT (612) 673-2383 REGARDING DETAILS OF SIDEWALK AND LANE CLOSURES. LOG ON TO HTTP://MINNEAPOLIS.MN.ROWAY.NET/ FOR A PERMIT.
3. CONTACT ALLAN KLUGMAN AT (612) 673-2743 PRIOR TO CONSTRUCTION FOR THE TEMPORARY REMOVAL/TEMPORARY RELOCATION OF ANY CITY OF MINNEAPOLIS SIGNAL SYSTEM THAT MAY BE IN THE WAY OF CONSTRUCTION.
4. ALL COSTS FOR RELOCATION AND/OR REPAIR OF CITY TRAFFIC FACILITIES SHALL BE BORNE BY THE CONTRACTOR AND/OR PROPERTY OWNER.
5. CONTACT DOUG MADKY AT (612) 673-5755 PRIOR TO CONSTRUCTION FOR THE REMOVAL OF ANY CITY OF MINNEAPOLIS RIGHT OF WAY SIGNS THAT MAY BE IN THE WAY OF CONSTRUCTION.
6. NO CONSTRUCTION, DEMOLITION OR COMMERCIAL POWER MAINTENANCE EQUIPMENT SHALL BE OPERATED WITHIN THE CITY BETWEEN THE HOURS OF 6:00 P.M. AND 7:00 A.M. ON WEEKDAYS OR DURING ANY HOURS ON SATURDAYS, SUNDAYS AND STATE AND FEDERAL HOLIDAYS, EXCEPT UNDER PERMIT. CONTACT ENVIRONMENTAL SERVICES AT 612-673-3867 FOR PERMIT INFORMATION.

DEMOLITION AND REMOVAL NOTES:

1. PRIOR TO START OF DEMOLITION, ALL EROSION AND SEDIMENT CONTROL MEASURES ARE TO BE INSTALLED BY THE CONTRACTOR AND INSPECTED BY THE CITY OF MINNEAPOLIS. ALL SILT FENCES SHALL BE INSTALLED AND INSPECTED PRIOR TO ANY CONSTRUCTION ACTIVITY. SILT FENCES SHALL BE INSTALLED ALONG THE CONTOUR.
2. IT IS THE CONTRACTOR'S RESPONSIBILITY TO ASCERTAIN THE LOCATION OF ALL EXISTING UTILITIES. THE CONTRACTOR SHALL VERIFY THE LOCATION, ELEVATION AND MARK ALL EXISTING UTILITIES 48 HOURS BEFORE CONSTRUCTION STARTS. THE ENGINEER, ARCHITECT OR OWNER DOES NOT GUARANTEE THAT ALL THE UTILITIES ARE MAPPED, OR IF MAPPED, ARE SHOWN CORRECTLY. CONTACT GOPHER STATE ONE CALL AT 651-454-0002 FOR FIELD LOCATING EXISTING UTILITIES. CONTACT UTILITY OWNER IF DAMAGE OCCURS DUE TO CONSTRUCTION.
3. THERE MAY BE MISCELLANEOUS ITEMS TO BE REMOVED THAT ARE NOT IDENTIFIED ON THESE PLANS. THE CONTRACTOR SHALL VISIT THE SITE AND REVIEW THE DOCUMENTS TO OBTAIN A CLEAR UNDERSTANDING OF THE INTENDED SCOPE OF WORK.
4. PRIOR TO START OF CONSTRUCTION, DISCONNECT ALL GAS AND ELECTRIC SERVICES. COORDINATE DISCONNECTION OF EACH UTILITY WITH THE UTILITY OWNER. REMOVE ALL GAS AND ELECTRIC LINES UNDER PROPOSED BUILDING FOOTPRINT.
5. ANY UTILITIES NOT INDICATED FOR REMOVAL OR ABANDONMENT, ARE TO BE PROTECTED AT ALL TIMES.
6. ALL EXISTING CURB AND GUTTER IS TO BE REMOVED WITHIN THE SCOPE OF THE PROJECT FROM THE SAW CUT LINES TO THE NEAREST JOINT.
7. THE BACKGROUND INFORMATION WAS PREPARED BY EGAN, FIELD & NOWAK, INC. (612) 466-3300.
8. ALL WORK IN THE PUBLIC RIGHT OF WAY IS TO BE COORDINATED WITH THE CITY OF MINNEAPOLIS. ROADWAY REPAIRS, BOULEVARD REPAIRS, AND TRAFFIC CONTROL ARE TO BE PER CITY OF MINNEAPOLIS STANDARDS AND SPECIFICATIONS.

GENERAL NOTES:

1. CONCRETE CURB AND GUTTER REMOVAL, PAVEMENT REMOVAL, AND UTILITY REMOVAL LIMITS ARE TO BE COORDINATED THE CITY OF MINNEAPOLIS AND UTILITY OWNER. REFER TO ALL CONSTRUCTION DOCUMENTS.
2. THE CONTRACTOR SHALL DEVELOP AND IMPLEMENT A TRAFFIC CONTROL PLAN WHILE WORKING WITHIN THE RIGHT-OF-WAY. THE TRAFFIC CONTROL PLAN SHALL BE APPROVED BY THE CITY ENGINEERING DEPARTMENT PRIOR TO STREET ENCROACHMENT.
3. CONTRACTOR SHALL VISIT THE SITE PRIOR TO BIDDING AND REVIEW ALL CONSTRUCTION DOCUMENTS AND GEOTECHNICAL REPORTS. NO ADDITIONAL COMPENSATION WILL BE ALLOWED FOR ITEMS THAT SHOULD HAVE BEEN ANTICIPATED BY PERFORMING THE ABOVE.
4. THE ROCK CONSTRUCTION ENTRANCE INDICATED ON THE PLAN IS SHOWN IN AN APPROXIMATE LOCATION. PRIOR TO START OF CONSTRUCTION, THE CONTRACTOR IS TO COORDINATE WITH THE CITY OF MINNEAPOLIS FOR THE EXACT ROCK CONSTRUCTION ENTRANCE LOCATION.

CUNINGHAM GROUP

Cuningham Group Architecture, Inc.

St. Anthony Main
201 Main St. SE
Suite 325
Minneapolis, MN
55414

Tel: 612 379 3400
Fax: 612 379 4400

www.cuningham.com

Consultant

BKBM

5930 Brooklyn Boulevard
Minneapolis, MN 55429-2518
Phone: (763) 843-0420
Fax: (763) 843-0421
www.bkbm.com

© 2013 BKBM Professional Engineers, Inc.
All rights reserved. This document is the instrument of service and is the property of BKBM Professional Engineers, Inc. and may not be reproduced or used without written consent.

BKBM Job No. 142160.00

Revisions

No.	Date	Description

I hereby certify that this plan, specification or report was prepared by me or under my direct supervision and that I am a duly Licensed Professional Engineer under the laws of the state of Minnesota.

KEITH A. MATTE

Date XX/XX/20XX

Lic. No. 46674

PDR RE-SUBMITTAL 12/11/2015

Document Phase:	PDR RE-SUBMITTAL
Date:	DECEMBER 11, 2015
PIC / AIC:	
Drawn By:	SJH
Checked By:	KAM
Comm. No.:	

Project Title

EPISCOPAL COMMONS

Sheet Title

Demolition and Erosion Control Plan

Sheet Number

C100

Copyright © 2013 by Cuningham Group Architecture, Inc. (All Rights Reserved)

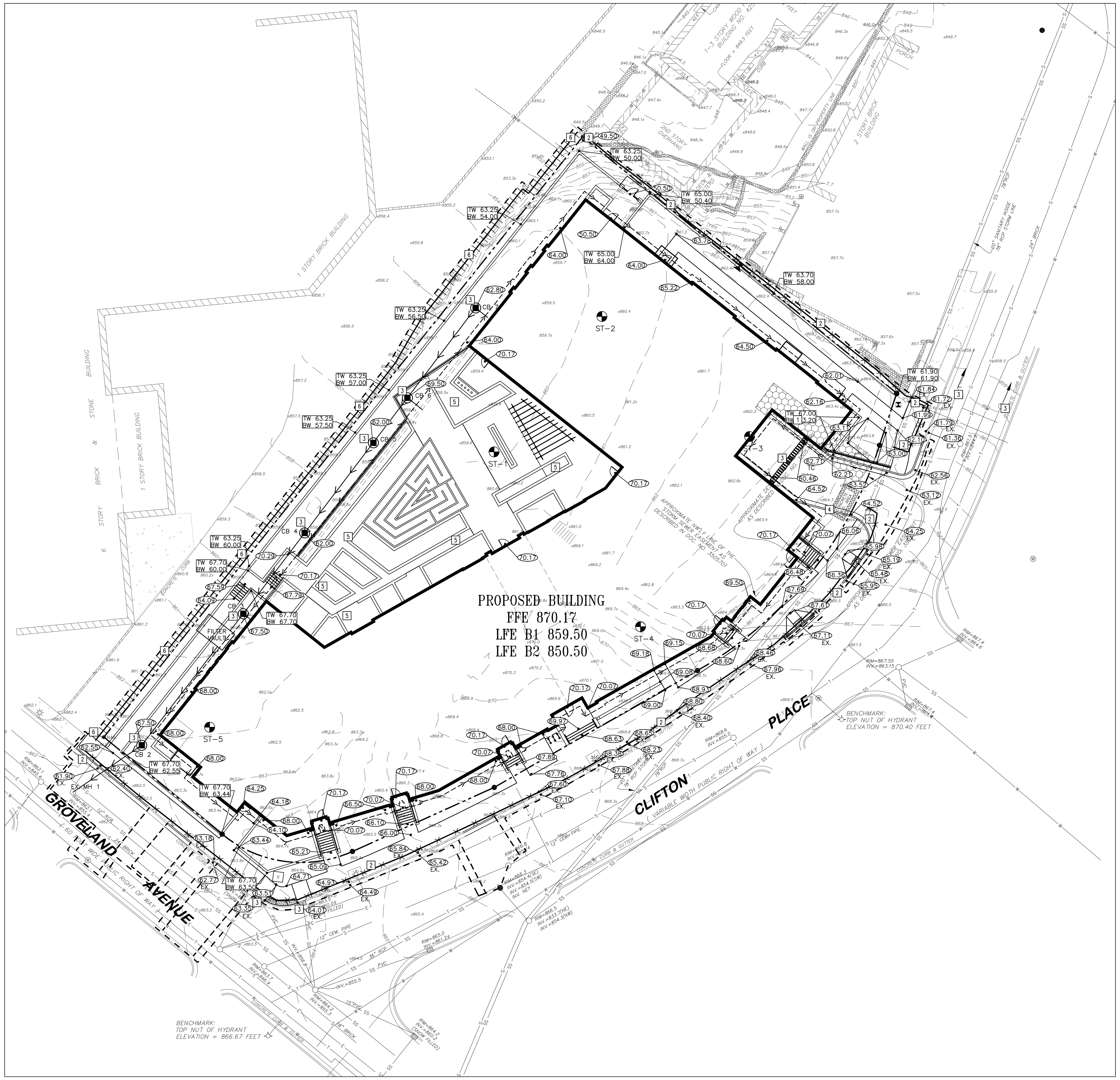

1/C200 GRADING, DRAINAGE, AND EROSION CONTROL PLAN
1"=20'

PROPOSED PLAN SYMBOLS

- CONSTRUCTION LIMITS
- SEDIMENT CONTROL (SILTATION FENCE)
- SEDIMENT CONTROL (BIO-ROLL)
- PROPERTY LINE
- SAWCUT LINE (APPROX.)
- STORM SEWER
- RETAINING WALL
- CATCH BASIN
- MANHOLE
- ROCK CONSTRUCTION ENTRANCE
- RETAINING WALL SPOT ELEVATION (TW 95.20 / BW 93.20)
- SPOT ELEVATION (95.20)
- SOIL BORING (SB-1)
- CONCRETE WASHOUT AREA (CONCRETE W.O. AREA)

ABBREVIATIONS

BLDG	Building
BM	Bench Mark
BW	Bottom of Wall
CB	Catch Basin
CONC	Concrete
ELEV	Elevation
EX	Existing
FFE	Finished Floor Elevation
INV	Invert
LFE	Lower Floor Elevation
MAX	Maximum
MH	Manhole
MIN	Minimum
PVC	Polyvinyl Chloride
RCP	Reinforced Concrete Pipe
TW	Top of Wall
W.O.	Washout

NOTE: ALL SIDEWALK, CURB AND GUTTER, DRIVEWAY ENTRANCES, AND ALLEYS ARE TO BE CONSTRUCTED PER:

STANDARD SUPPLEMENTAL SPECIFICATIONS FOR CONSTRUCTION OF PUBLIC INFRASTRUCTURE IN THE CITY OF MINNEAPOLIS 2011 EDITION

BY

DEPARTMENT OF PUBLIC WORKS
MINNEAPOLIS, MINNESOTA
FEBRUARY 1, 2011

NOTE:
STORM SEWER INLETS NOT SHOWN ON PLAN MAY RECEIVE RUNOFF FROM CONSTRUCTION ACTIVITIES. INSTALL INLET SEDIMENT PROTECTION PER DETAIL 3/C500 ON ALL STORM INLETS THAT MAY RECEIVE RUNOFF.

APPROXIMATE DISTURBED AREA IS 1.26 ACRES

NOTE:
CONTRACTOR, PROPERTY OWNER OR RESPONSIBLE PARTY SHALL CONTACT MINNEAPOLIS SURFACE WATERS AND SEWERS 48 HOURS PRIOR TO AND EXCAVATION OR CONSTRUCTION RELATED TO OR IN THE LOCATION OF THE PROPOSED STORMWATER MANAGEMENT BMP. CONTACT PAUL CHELLSEN, 612-673-2406 OR PAUL.CHELLSEN@MINNEAPOLISMN.GOV.

UPON THE PROJECT'S COMPLETION THE GENERAL CONTRACTOR, PROPERTY OWNER OR RESPONSIBLE PARTY SHALL PROVIDE TO THE DEPARTMENT OF PUBLIC WORKS A FINAL STORMWATER MANAGEMENT REPORT INCLUDING RECORD DRAWINGS. THIS REPORT WILL SERVE AS A MEANS OF VERIFICATION THAT THE INTENT OF THE APPROVED STORMWATER MANAGEMENT DESIGN HAS BEEN MET. THIS FINAL REPORT SHALL SUBSTANTIATE THAT ALL ASPECTS OF THE ORIGINAL DESIGN HAVE BEEN ADEQUATELY PROVIDED FOR BY THE CONSTRUCTION OF THE PROJECT.

N

SCALE 1" = 20' (20' 10' 0 20' 40')

KEYED NOTES

KEYED NOTES ARE DENOTED BY [NO] ON PLAN.

1. INSTALL ROCK CONSTRUCTION ENTRANCE. REFER TO DETAIL 1/C500.
2. INSTALL PERIMETER SEDIMENT CONTROL. REFER TO DETAIL 2/C500.
3. INSTALL INLET SEDIMENT PROTECTION. REFER TO DETAIL 3/C500.
4. APPROXIMATE LOCATION OF TEMPORARY CONTAINED CONCRETE WASH OUT BIN. REFER TO THE MINNESOTA'S NPDES/SDS GENERAL STORMWATER PERMIT FOR CONSTRUCTION ACTIVITY FOR MORE DETAILS. SELF CONTAINED CONCRETE WASHOUTS ON CONCRETE DELIVERY TRUCKS IS AN ACCEPTABLE ALTERNATIVE TO ON-SITE CONTAINMENT.
5. COORDINATE WITH LANDSCAPE ARCHITECT, STRUCTURAL, ARCHITECTURAL, AND MECHANICAL ENGINEER DRAWINGS FOR FINISH ELEVATION, WALL HEIGHTS, PAVING, AND DRAINAGE FOR ITEMS LOCATED ON-TOP OF STRUCTURE.
6. INSTALL PERIMETER SEDIMENT CONTROL. REFER TO DETAIL 2/C200.

RETAINING WALL NOTES:

1. ALL TOP AND BOTTOM ELEVATIONS CORRESPOND TO THE RESPECTIVE GRADE ELEVATIONS ON EACH SIDE OF THE WALL.
2. THE BOTTOM ELEVATION IS THE ELEVATION OF THE LOW-GRADE SIDE OF THE WALL, NOT THE TOP ELEVATION OF THE BURIED BLOCK COURSE.
3. ALL RETAINING WALLS SHALL HAVE PROTECTIVE FENCING AT THE TOP WHERE THE VERTICAL HEIGHT EXCEEDS 30 INCHES. REFER TO ARCHITECTURAL AND LANDSCAPE PLANS AND SPECIFICATIONS.
4. MODULAR BLOCK RETAINING WALL SHALL BE DESIGNED AND CERTIFIED BY A LICENSED PROFESSIONAL ENGINEER. DESIGN CALCULATIONS AND SHOP DRAWINGS SHALL BE SUBMITTED TO THE OWNER AND ARCHITECT PRIOR TO CONSTRUCTION OF WALL.

WALKWAY NOTES:

1. GRADING CONTRACTOR IS TO COORDINATE WITH PAVING CONTRACTOR SO THAT ALL STEPS AND LANDINGS ARE SLOPED PER CODE.
2. ALL SIDEWALK LONGITUDINAL AND TRANSVERSE SLOPES ARE TO BE PER CODE.

MINNEAPOLIS CONSTRUCTION NOTES:

1. STREET LIGHTING INSTALLED AS PART OF THE PROJECT SHALL BE INSPECTED BY THE CITY. CONTRACTORS SHALL ARRANGE FOR INSPECTIONS WITH THE TRAFFIC DEPARTMENT, PLEASE CONTACT DAVE PREHALL AT (612) 673-5759 FOR FURTHER INFORMATION. ANY LIGHTING INSTALLATIONS NOT MEETING CITY SPECIFICATIONS WILL BE REQUIRED TO BE REINSTALLED AT OWNER EXPENSE.
2. AN OBSTRUCTION PERMIT IS REQUIRED ANYTIME CONSTRUCTION WORK IS PERFORMED IN THE PUBLIC RIGHT-OFWAY. PLEASE CONTACT SCOTT KRAMER AT (612) 673-2383 REGARDING DETAILS OF SIDEWALK AND LANE CLOSURES. LOG ON TO HTTP://MINNEAPOLIS.MN.ROWAY.NET/ FOR A PERMIT.
3. CONTACT ALLAN KLUGMAN AT (612) 673-2743 PRIOR TO CONSTRUCTION FOR THE TEMPORARY REMOVAL/TEMPORARY RELOCATION OF ANY CITY OF MINNEAPOLIS SIGNAL SYSTEM THAT MAY BE IN THE WAY OF CONSTRUCTION.
4. ALL COSTS FOR RELOCATION AND/OR REPAIR OF CITY TRAFFIC FACILITIES SHALL BE BORNE BY THE CONTRACTOR AND/OR PROPERTY OWNER.
5. CONTACT DOUG MADAY AT (612) 673-5755 PRIOR TO CONSTRUCTION FOR THE REMOVAL OF ANY CITY OF MINNEAPOLIS RIGHT OF WAY SIGNS THAT MAY BE IN THE WAY OF CONSTRUCTION.
6. NO CONSTRUCTION, DEMOLITION OR COMMERCIAL POWER MAINTENANCE EQUIPMENT SHALL BE OPERATED WITHIN THE CITY BETWEEN THE HOURS OF 6:00 P.M. AND 7:00 A.M. ON WEEKDAYS OR DURING ANY HOURS ON SATURDAYS, SUNDAYS AND STATE AND FEDERAL HOLIDAYS, EXCEPT UNDER PERMIT. CONTACT ENVIRONMENTAL SERVICES AT 612-673-3867 FOR PERMIT INFORMATION.

MINNEAPOLIS STANDARD EROSION CONTROL NOTES – (JANUARY 7, 2011)

1. **CONTRACTOR MUST CALL A CONSTRUCTION START 48 HOURS PRIOR TO ANY LAND DISTURBANCES 612-673-3867. FAILURE TO DO SO MAY RESULT IN FINES, THE REVOCATION OF PERMIT AND A STOP WORK ORDER BEING ISSUED.**
2. INSTALL PERIMETER EROSION CONTROL AT THE LOCATIONS SHOWN ON THE PLANS PRIOR TO THE COMMENCEMENT OF ANY LAND DISTURBANCE OR CONSTRUCTION ACTIVITIES.
3. BEFORE BEGINNING CONSTRUCTION, INSTALL A TEMPORARY ROCK CONSTRUCTION ENTRANCE AT EACH POINT WHERE VEHICLES EXIT THE CONSTRUCTION SITE. USE 2 INCH OR GREATER DIAMETER ROCK IN A LAYER AT LEAST 6 INCHES THICK ACROSS THE ENTIRE WIDTH OF THE ENTRANCE. EXTEND THE ROCK ENTRANCE AT LEAST 50 FEET INTO THE CONSTRUCTION ZONE USING A GEO-TEXTILE FABRIC BENEATH THE AGGREGATE TO PREVENT MIGRATION OF SOIL INTO THE ROCK FROM BELOW.
4. REMOVE ALL SOILS AND SEDIMENTS TRACKED OR OTHERWISE DEPOSITED ONTO PUBLIC AND PRIVATE PAVEMENT AREAS. REMOVAL SHALL BE ON A DAILY BASIS WHEN TRACKING OCCURS AND MAY BE ORDERED BY MINNEAPOLIS INSPECTORS AT ANY TIME IF CONDITIONS WARRANT. SWEEPING SHALL BE MAINTAINED THROUGHOUT THE DURATION OF THE CONSTRUCTION AND DONE IN A MANNER TO PREVENT DUST BEING BLOWN TO ADJACENT PROPERTIES.
5. INSTALL INLET PROTECTION AT ALL PUBLIC AND PRIVATE CATCH BASIN INLETS, WHICH RECEIVE RUNOFF FROM THE DISTURBED AREAS. CONTRACTOR SHALL CLEAN, REMOVE SEDIMENT OR REPLACE STORM DRAIN INLET PROTECTION DEVICES ON A ROUTINE BASIS SUCH THAT THE DEVICES ARE FULLY FUNCTIONAL FOR THE NEXT RAIN EVENT. SEDIMENT DEPOSITED IN AND/OR PLUGGING DRAINAGE SYSTEMS IS THE RESPONSIBILITY OF THE CONTRACTOR. **HAY BALES OR FILTER FABRIC WRAPPED GRATES ARE NOT ALLOWED FOR INLET PROTECTION.**
6. LOCATE SOIL OR DIRT STOCKPILES NO LESS THAN 25 FEET FROM ANY PUBLIC OR PRIVATE ROADWAY OR DRAINAGE CHANNEL. IF REMAINING FOR MORE THAN SEVEN DAYS, STABILIZE THE STOCKPILES BY MULCHING, VEGETATIVE COVER, TARPS, OR OTHER MEANS. CONTROL EROSION FROM ALL STOCKPILES BY PLACING SILT BARRIERS AROUND THE PILES. TEMPORARY STOCKPILES LOCATED ON PAVED SURFACES MUST BE NO LESS THAN TWO FEET FROM THE DRAINAGE/GUTTER LINE AND SHALL BE COVERED IF LEFT MORE THAN 24 HOURS.
7. MAINTAIN ALL TEMPORARY EROSION AND SEDIMENT CONTROL DEVICES IN PLACE UNTIL THE CONTRIBUTING DRAINAGE AREA HAS BEEN STABILIZED. INSPECT TEMPORARY EROSION AND SEDIMENT CONTROL DEVICES ON A DAILY BASIS AND REPLACE DETERIORATED, DAMAGED, OR ROTTED EROSION CONTROL DEVICES IMMEDIATELY.
8. TEMPORARILY OR PERMANENTLY STABILIZE ALL CONSTRUCTION AREAS WHICH HAVE UNDERGONE FINAL GRADING, AND ALL AREAS IN WHICH GRADING OR SITE BUILDING CONSTRUCTION OPERATIONS ARE NOT ACTIVELY UNDERWAY AGAINST EROSION DUE TO RAIN, WIND AND RUNNING WATER WITHIN 7-14 DAYS. USE SEED AND MULCH, EROSION CONTROL MATTING, AND/OR SODDING AND STAKING IN GREEN SPACE AREAS. REMOVE ALL TEMPORARY SYNTHETIC, STRUCTURAL, NON-BIODEGRADABLE EROSION AND SEDIMENT CONTROL DEVICES AFTER THE SITE HAS UNDERGONE FINAL STABILIZATION WITH PERMANENT VEGETATION ESTABLISHMENT. FINAL STABILIZATION FOR PURPOSES OF THIS REMOVAL IS 70% ESTABLISHED COVER OVER DENUDED AREA.
9. READY MIXED CONCRETE AND CONCRETE BATCH/MIX PLANTS ARE PROHIBITED WITHIN THE PUBLIC RIGHT OF WAY. ALL CONCRETE RELATED PRODUCTION, CLEANING AND MIXING ACTIVITIES SHALL BE DONE IN THE DESIGNATED CONCRETE MIXING/WASHOUT LOCATIONS AS SHOWN IN THE EROSION CONTROL PLAN. UNDER NO CIRCUMSTANCE MAY WASHOUT WATER DRAIN ONTO THE PUBLIC RIGHT OF WAY OR INTO ANY PUBLIC OR PRIVATE STORM DRAIN CONVEYANCE.
10. CHANGES TO APPROVED EROSION CONTROL PLAN MUST BE APPROVED BY THE EROSION CONTROL INSPECTOR PRIOR TO IMPLEMENTATION. CONTRACTOR TO PROVIDE INSTALLATION AND DETAILS FOR ALL PROPOSED ALTERNATE TYPE DEVICES.
11. IF DEWATERING OR PUMPING OF WATER IS NECESSARY, THE CONTRACTOR IS RESPONSIBLE FOR OBTAINING ANY NECESSARY PERMITS AND/OR APPROVALS PRIOR TO DISCHARGE OF ANY WATER FROM THE SITE. IF THE DISCHARGE FROM THE DEWATERING OR PUMPING PROCESS IS TURBID OR CONTAINS SEDIMENT LADEN WATER, IT MUST BE TREATED THROUGH THE USE OF SEDIMENT TRAPS, VEGETATIVE FILTER STRIPS, OR OTHER SEDIMENT REDUCING MEASURES SUCH THAT THE DISCHARGE IS NOT VISIBLY DIFFERENT FROM THE RECEIVING WATER. ADDITIONAL EROSION CONTROL MEASURES MAY BE REQUIRED AT THE DISCHARGE POINT TO PREVENT SCOUR EROSION. THE CONTRACTOR SHALL PROVIDE A DEWATERING/PUMPING PLAN TO THE EROSION CONTROL INSPECTOR PRIOR TO INITIATING DEWATERING ACTIVITIES.

GRADING NOTES:

1. THE CONTRACTOR SHALL VISIT THE SITE, REVIEW ALL CONSTRUCTION DOCUMENTS AND FIELD VERIFY THE EXISTING CONDITIONS PRIOR TO BIDDING. NO ADDITIONAL COMPENSATION WILL BE GIVEN FOR WORK THAT COULD HAVE BEEN IDENTIFIED BY A SITE VISIT OR CONSTRUCTION DOCUMENT REVIEW.
2. THE BACKGROUND INFORMATION WAS PREPARED BY EGAN, FIELD & NOWAK. CONTACT (612) 466-3300.
3. IT IS THE CONTRACTOR'S RESPONSIBILITY TO ASCERTAIN THE LOCATION OF ALL EXISTING UTILITIES. THE CONTRACTOR SHALL VERIFY THE LOCATION, ELEVATION AND MARK ALL EXISTING UTILITIES 48 HOURS BEFORE CONSTRUCTION STARTS. THE ENGINEER, ARCHITECT OR OWNER DOES NOT GUARANTEE THAT ALL THE UTILITIES ARE MAPPED, OR IF MAPPED, ARE SHOWN CORRECTLY. CONTACT GOPHER ONE AT 651-454-0002 FOR FIELD LOCATING EXISTING UTILITIES. CONTACT UTILITY OWNER IF DAMAGE OCCURS DUE TO CONSTRUCTION.
4. PROTECT ALL EXISTING STRUCTURES AND UTILITIES WHICH ARE NOT SCHEDULED FOR REMOVAL.
5. NOTIFY CITY BUILDING INSPECTOR BEFORE TRENCHING AND EXCAVATION WORK COMMENCES. THE CONTRACTOR SHALL OBTAIN ALL APPLICABLE PERMITS PRIOR TO START OF CONSTRUCTION.
6. ALL SPOT ELEVATIONS SHOWN AS 95.2, FOR EXAMPLE, ARE TO BE UNDERSTOOD TO MEAN 895.20.
7. ALL SPOT ELEVATIONS ALONG THE CURB-LINE INDICATE THE ELEVATION OF THE GUTTER, UNLESS NOTED OTHERWISE.
8. NO LANDSCAPED SLOPES ARE TO EXCEED 3:1 (3 FEET HORIZONTAL TO 1 FOOT VERTICAL) UNLESS NOTED OTHERWISE.
9. PROVIDE POSITIVE DRAINAGE FROM BUILDINGS AT ALL TIMES.
10. UPON COMPLETION OF THE GRADING AND UTILITY WORK, THE DEVELOPER SHALL CERTIFY THAT ALL GRADING AND UTILITY WORK WAS PERFORMED IN ACCORDANCE WITH THE APPROVED GRADING AND UTILITY PERMITS. AN AS-BUILT GRADING AND UTILITY PLAN SHALL BE SUBMITTED TO THE CITY FOR REVIEW AND DISTRIBUTION.
11. PRIOR TO ISSUANCE OF BUILDING PERMITS, ALL NECESSARY EROSION CONTROL DEVICES MUST BE IN PLACE AND FUNCTIONING. THE CITY AND WATERSHED WILL INSPECT THE SITE TO DETERMINE ITS SUITABILITY FOR BUILDING ACTIVITIES. IF THE PUBLIC UTILITIES HAVE NOT BEEN INSTALLED AT THIS POINT, IT MAY BE NECESSARY TO WITHHOLD BUILDING PERMITS FOR VARIOUS LOTS TO ALLOW THE CONTRACTOR ADEQUATE SPACE TO PERFORM THIS WORK.
12. ALL DEBRIS CREATED IN THE PROCESS OF CLEARING AND GRADING THE SITE SHALL BE REMOVED FROM THE SITE. THIS INCLUDES TREES AND SHRUBS. UNDER NO CIRCUMSTANCES SHALL THIS TYPE OF MATERIAL BE BURIED OR BURNED ON THE SITE.
13. THE INTENT IS TO STRIP AND SALVAGED TOPSOIL FOR POTENTIAL RE-SPREADING ON THE SITE, IF APPROVED BY THE LANDSCAPE ARCHITECT AND/OR SPECIFICATIONS. SIX INCHES OF TOPSOIL – AFTER COMPACTION – SHALL BE RE-SPREAD PRIOR TO SEEDING AND MULCHING. EXCESS TOPSOIL MAY BE REMOVED FROM THE SITE PROVIDING THERE IS ADEQUATE TOPSOIL REMAINING TO PROPERLY FINISH THE SITE AS NOTED ABOVE. THE TOPSOIL STRIPPING, STOCKPILING AND RE-SPREADING SHALL BE DONE IN ACCORDANCE TO, AND NOTED ON, THE APPROVED GRADING PLAN AND SPECIFICATIONS. THE CONTRACTOR SHALL REFER TO THE LANDSCAPE DRAWINGS AND SPECIFICATIONS FOR ANY SPECIAL TOPSOIL OR PLANTING REQUIREMENTS.
14. ALL GRADING OPERATIONS SHALL BE CONDUCTED IN A MANNER TO MINIMIZE THE POTENTIAL FOR SITE EROSION. EROSION CONTROL MEASURES SHALL BE INSTALLED TO PREVENT SEDIMENT FROM RUNNING OFF ONTO ADJACENT PROPERTIES. ANY DAMAGE TO ADJACENT PROPERTIES MUST BE CORRECTED AND RESTORED AS SOON AS PERMISSION IS GRANTED FROM THE ADJACENT PROPERTY OWNER(S).
15. IF CONSTRUCTION OF THE SITE WORK PROCEEDS THROUGH THE WINTER MONTHS, ANY DISTURBED AREAS OUTSIDE THE BUILDING FOOTPRINTS ARE TO BE MINIMALLY STABILIZED PRIOR TO MARCH 1, AS FOLLOWS: AREAS PLANNED TO RECEIVE PAVEMENTS ARE TO HAVE CLASS 5 BASE INSTALLED; ALL OTHER DISTURBED AREAS ARE TO BE SEEDED, STRAW MULCH PLACED, AND DISC-ANCHORED.
16. WINTER MULCHING:
    - 16.A. SNOW MULCHING SHALL BE DEFINED AS MULCH MATERIAL SPREAD OVER THE TOP OF SNOW SO THAT THE MULCH MELTS THROUGH THE SNOW AND STICKS TO THE EXPOSED SOILS.
    - 16.B. FROZEN GROUND MULCHING SHALL BE DEFINED AS MULCH MATERIAL SPREAD OVER FROZEN GROUND. MULCH MATERIALS THAT DO NOT REQUIRE DISC-ANCHORING INTO THE SOIL MAY BE PLACED WITHOUT MODIFICATION. MULCH MATERIALS THAT REQUIRE DISC-ANCHORING MAYBE ANCHORED WITH HYDRAULIC SOIL STABILIZERS OR MAY BE FROZEN TO THE SOIL BY APPLYING WATER, AT A RATE OF 2000 GALLONS PER ACRE, OVER THE MULCH AS A SUBSTITUTION FOR DISC-ANCHORING.
17. RETAINING WALLS AND APPROPRIATE SAFETY FENCING ALONG THE TOP OF WALLS ARE TO BE DESIGNED AND CERTIFIED BY A REGISTERED PROFESSIONAL ENGINEER. SUBMIT RETAINING WALL SHOP DRAWINGS TO PROJECT TEAM PRIOR TO CONSTRUCTION.
18. THE CONTRACTOR SHALL LIMIT THE DISTURBED AREA AS MUCH AS POSSIBLE.

ENDS SECURELY CLOSED TO PREVENT LOSS OF OPEN GRADED AGGREGATE FILL SECURED WITH 50 PSI. ZIP TIE

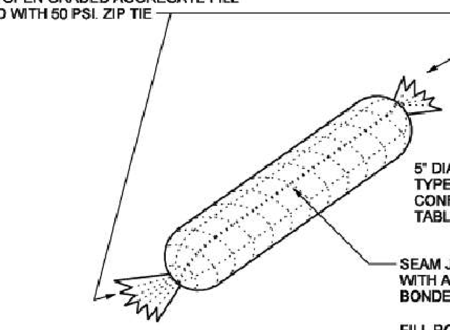

5" DIAMETER GEOTEXTILE SOCK, TYPE WOVEN MONOFILAMENT CONFORMING TO MNDOT SPEC. 3886, TABLE 3886-1. MACHINE SLICE

SEAM JOINED BY TWO ROWS OF STITCHING WITH A PLASTIC MESH BACKING OR HEAT BONDED (OR APPROVED EQUIVALENT)

FILL ROCK LOG WITH 45 LBS. OF OPEN GRADED AGGREGATE CONSISTING OF SOUND, DURABLE PARTICLES OF CRUSHED QUARRY ROCK OR GRAVEL CONFORMING TO THE FOLLOWING GRADATION

INLET PROTECTION WITH FILTER LOG
DO NOT USE IN LIVE TRAFFIC AREAS

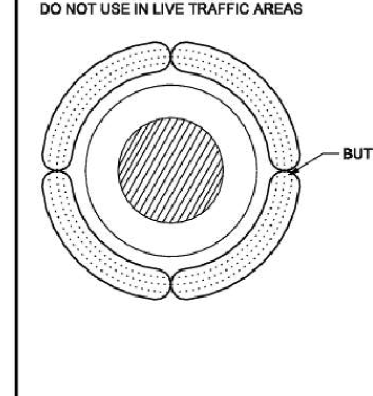

GRADATION

SIEVE SIZE	PERCENT PASSING
11/2 INCH	100
1 INCH	95-100
3/4 INCH	65-95
3/8 INCH	30-65
NO. 4	10-35
NO.10	3-20
NO. 40	0-8
NO. 200	0-3

NOTE: CRUSHED CONCRETE OR BITUMINOUS SHALL NOT BE USED FOR OPEN GRADED AGGREGATE.

PAYMENT SHALL INCLUDE ALL MATERIALS, FILLING OF LOG,PLACEMENT, MAINTENANCE, & REMOVAL. 80% OF BID PRICE SHALL BE PAID UPON PROPER PLACEMENT WITH THE FINAL 20% PAID UPON REMOVAL.

FILTER LOGS MNDOT SPEC. 3897

STRAW BIOROLL	GRAIN AND SEED FREE OF WEEDS, 6-9 MONTH POLYPROPYLENE NETTING
WOOD FIBER BIOROLL	EXCELSIOR FIBER LOG, 6-9 MONTH POLYPROPYLENE NETTING
COMPOST LOG	30-40% WEED FREE COMPOST (3890, GRADE 2), 8" DIAMETER GEOTECHNICAL CYLINDRICAL BAG
ROCK LOG	4"-6" DIAMETER, SEE SIEVE SIZE CHART ABOVE

FIBER LOG MNDOT SPEC. 3895
12" DIAMETER COCONUT FIBER (COIR),
OUTER COIR NETTING REQUIRED, MINIMUM 5 YEAR LIFE

MINNEAPOLIS CUSTOM MNDOT SPEC. REF. 3897 NOT TO SCALE

MINNEAPOLIS DEPARTMENT OF PUBLIC WORKS		SEDIMENT CONTROL – FILTER LOG	STANDARD PLATE NO. SEWR-8008
DRAWN: DCD	DATE: 4/07		
APPROVED: HRS	DATE: 4/07		

2/C200 SEDIMENT CONTROL– FILTER LOG
NOT TO SCALE

CUNINGHAM GROUP
Cuningham Group Architecture, Inc.
St. Anthony Main
201 Main St. SE
Suite 325
Minneapolis, MN 55414
Tel: 612 379 3400
Fax: 612 379 4400
www.cuningham.com

Consultant

BKBM
5930 Brooklyn Boulevard
Minneapolis, MN 55429-2518
Phone: (763) 843-0420
Fax: (763) 843-0421
www.bkbm.com

© 2015 BKBM Professional Engineers, Inc. All rights reserved. This document is an instrument of service and is the property of BKBM Professional Engineers, Inc. and may not be used or copied without prior written consent.

BKBM Job No. 14216.00

Revisions

No.	Date	Description

I hereby certify that this plan, specification or report was prepared by me or under my direct supervision and that I am a duly Licensed Professional Engineer under the laws of the state of Minnesota.

KEITH A. MATTE

Date	Lic. No.
XX/XX/20XX	46674

PDR RE-SUBMITTAL 12/11/2015

Document Phase:	PDR RE-SUBMITTAL
Date:	DECEMBER 11, 2015
PIC / AIC:	
Drawn By:	SJH
Checked By:	KAM
Comm. No.:	

Project Title
EPISCOPAL COMMONS

Sheet Title
Grading, Drainage, and Erosion Control Plan

Sheet Number
C200

Copyright © 2013 by Cuningham Group Architecture, Inc. (All Rights Reserved)

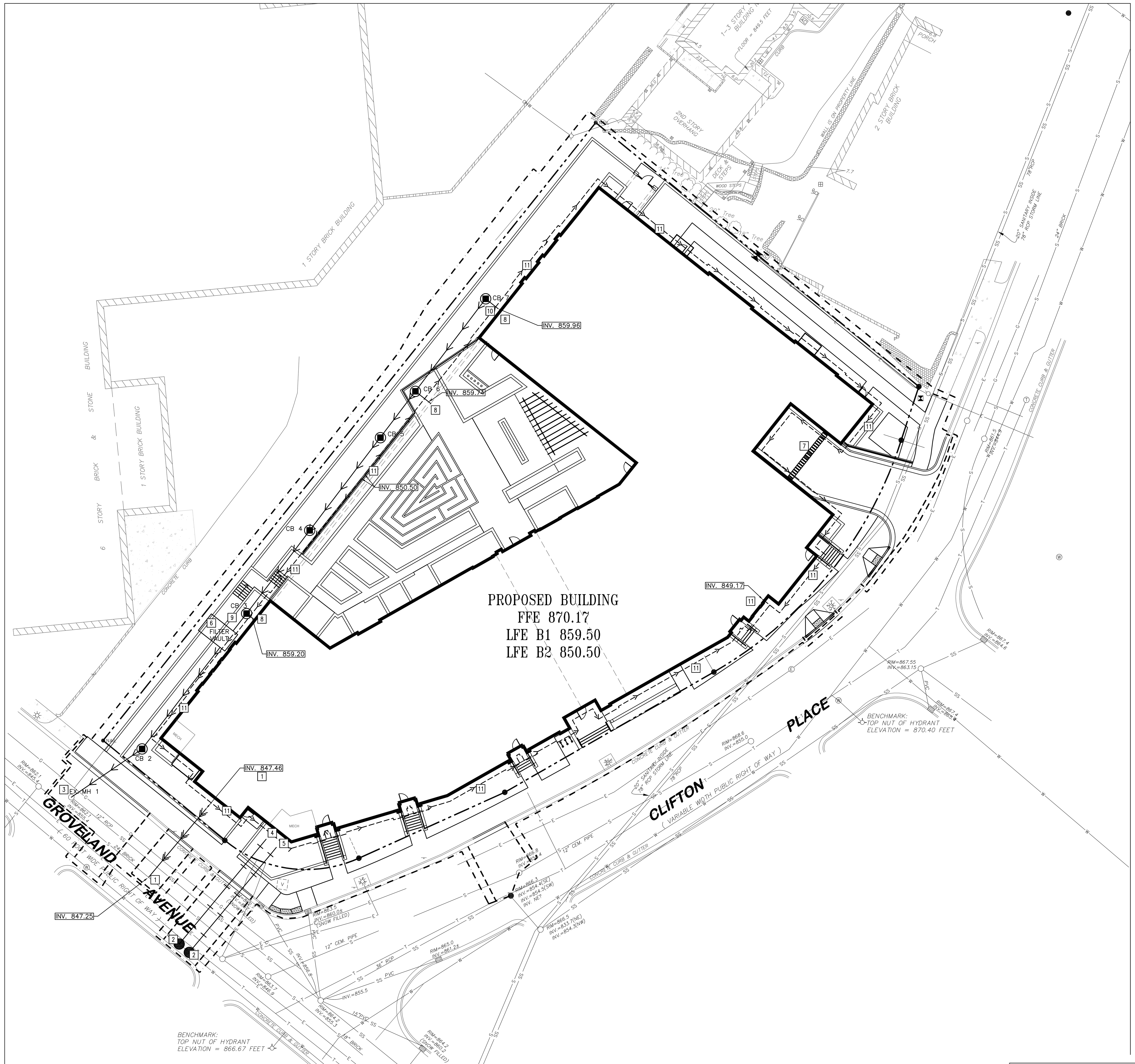

1 / C300 UTILITY PLAN
1"=20'

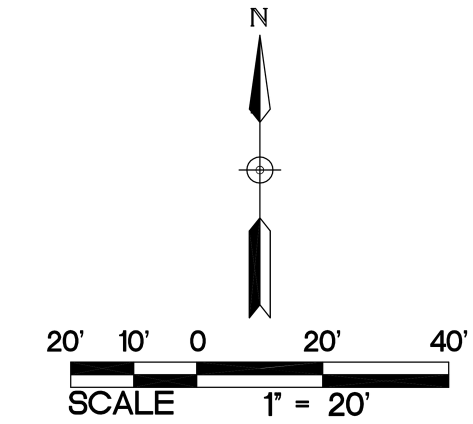

PROPOSED PLAN SYMBOLS	
CONSTRUCTION LIMITS	
PROPERTY LINE	
SAWCUT LINE (APPROX.)	
SANITARY SEWER	
WATER PIPE	
STORM SEWER	
DRAIN TILE	
RETAINING WALL	
CATCH BASIN	
MANHOLE	
SEWER INVERT ELEVATION	INV. 895.68

ABBREVIATIONS	
BLDG	Building
BM	Bench Mark
CB	Catch Basin
CONC	Concrete
DIP	Ductile Iron Pipe
ELEV	Elevation
EX	Existing
FFE	Finished Floor Elevation
INV	Invert
MAX	Maximum
MH	Manhole
MIN	Minimum
PVC	Polyvinyl Chloride
RCP	Reinforced Concrete Pipe
RD	Roof Drain

KEYED NOTES

KEYED NOTES ARE DENOTED BY [NO] ON PLAN.

1. COREDRILL INTO EXISTING 24-INCH BRICK SEWER AT INVERT 847.25. USE SEWER SADDLE AT PENETRATION. INSTALL NEW 8-INCH SCHEDULE 40 PVC SANITARY SEWER SERVICE AT 1% TO WITHIN 5-FEET OF BUILDING AT INVERT ELEVATION 847.46±. COORDINATE WITH MECHANICAL CONTRACTOR EXACT LOCATION AND INVERT PRIOR TO CONSTRUCTION. FOLLOW ALL CITY OF MINNEAPOLIS STANDARDS AND SPECIFICATIONS.
2. WETTAP EXISTING 12-INCH WATER MAIN FOR 8-INCH FIRE SERVICE AND 4-INCH DOMESTIC SERVICE. THE CITY OF MINNEAPOLIS WILL PROVIDE AND INSTALL THE WETTAP AND VALVE AS PART OF THE PERMIT FEE. THE CONTRACTOR IS TO EXCAVATE FOR THE WETTAP, CONSTRUCT THE WATER VALVE MANHOLE, CONNECT TO THE VALVE AND BACKFILL THE TRENCH PER CITY OF MINNEAPOLIS STANDARDS AND SPECIFICATIONS. REFER TO DETAILS 8/C500 & 10/C501. COORDINATE ALL WORK WITH CITY OF MINNEAPOLIS. CONTRACTOR SHALL SUBMIT TRAFFIC CONTROL PLANS TO MNDOT PRIOR TO CONSTRUCTION.
3. CORE DRILL EXISTING MANHOLE FOR NEW 12-INCH PVC STORM SEWER AT INVERT ELEVATION 855.70. GROUT SEAL AROUND PENETRATION. FOLLOW ALL CITY OF MINNEAPOLIS STANDARD AND SPECIFICATIONS.
4. STUB 8-INCH FIRE PROTECTION LINE TO WITHIN 5-FEET OF PROPOSED BUILDING. FOLLOW ALL CITY OF MINNEAPOLIS STANDARDS AND SPECIFICATIONS.
5. STUB 4-INCH DOMESTIC WATER SERVICE TO WITHIN 5-FEET OF PROPOSED BUILDING. FOLLOW ALL CITY OF MINNEAPOLIS STANDARDS AND SPECIFICATIONS.
6. INSTALL CONTECH STORM FILTER VAULT. VAULT IS TO HAVE HIGH FLOW BYPASS AND FILTER CAPACITY FOR 1.25" WATER QUALITY STORM EVENT. FLOW FOR WATER QUALITY EVENT IS 0.97 CUBIC FEET PER SECOND OR 435 GALLONS PER MINUTE. REFER TO DETAIL 3/C300.
7. INSTALL TRENCH DRAIN. TRENCH DRAIN OUTFLOW IS TO BE ROUTED INSIDE OF BUILDING AND DISCHARGED WITH BUILDING ROOF STORM DRAIN. COORDINATE WITH MECHANICAL ENGINEER PRIOR TO CONSTRUCTION. REFER TO DETAIL 4/C501.
8. ROOF DRAIN CONNECTION. REFER TO STORM SEWER TABLE FOR INVERT AND PIPE SIZES. COORDINATE WITH MECHANICAL ENGINEER EXACT INVERTS, SIZE, AND LOCATION PRIOR TO CONSTRUCTION.
9. INSTALL SUMP CATCH BASIN PER DETAIL 6/C501.
10. PROVIDE PIPE INSULATION PER DETAIL 2/C300.
11. INSTALL PERIMETER DRAIN TILE PER DETAIL 4/C300. COORDINATE WITH MECHANICAL ENGINEER FOR CONNECTION TO INTERNAL SUMP PRIOR TO CONSTRUCTION.

CITY OF MINNEAPOLIS UTILITY NOTES:

1. ALL WORK DONE OUTSIDE OF THE LOT LINE ON PUBLIC RIGHT-OF-WAY MUST BE DONE BY A CONTRACTOR LICENSED TO WORK IN THE CITY OF MINNEAPOLIS WHO HAS THE $100,000.00 SIDEWALK CONTRACTOR'S BOND ON FILE WITH THE SIDEWALK DIVISION.
2. ALL UTILITIES MUST BE INSTALLED BY A MINNEAPOLIS LICENSED CONTRACTOR.
3. CONTRACTOR SHALL CONTACT MINNEAPOLIS SURFACE WATERS AND SEWERS 48 HOURS PRIOR TO ANY EXCAVATION OR CONSTRUCTION RELATED TO OR IN THE LOCATION OF THE PROPOSED STORM WATER MANAGEMENT BMP. CONTACT PAUL CHELLSEN, 612-673-2406 PAUL.CHELLSEN@MINNEAPOLISMN.GOV.
4. UPON THE PROJECT'S COMPLETION, THE GENERAL CONTRACTOR SHALL PROVIDE TO THE DEPARTMENT OF PUBLIC WORKS A FINAL STORMWATER MANAGEMENT REPORT INCLUDING RECORD DRAWINGS. THIS REPORT WILL SERVE AS A MEANS OF VERIFICATION THAT THE INTENT OF THE APPROVED STORM WATER MANAGEMENT DESIGN HAS BEEN MET. THIS FINAL REPORT SHALL SUBSTANTIATE THAT ALL ASPECTS OF THE ORIGINAL DESIGN HAVE BEEN ADEQUATELY PROVIDED FOR BY THE CONSTRUCTION OF THE PROJECT.

UTILITY NOTES FOR WORK IN PUBLIC RIGHT-OF-WAY:

1. FOLLOW ALL CITY OF MINNEAPOLIS AND STANDARDS AND SPECIFICATIONS.
2. PRIOR TO CONSTRUCTION, CONTRACTORS ARE TO COORDINATE ALL WORK WITHIN RIGHT OF WAY AND OBTAIN ALL APPLICABLE PERMITS.

UTILITY NOTES:

1. COORDINATE SERVICE CONNECTION LOCATIONS AT THE BUILDING WITH THE MECHANICAL CONTRACTOR PRIOR TO CONSTRUCTION. NO ADDITIONAL COMPENSATION WILL BE ALLOWED FOR UNCOORDINATED WORK.
2. ALL SERVICE CONNECTIONS WITH LESS THEN 5 FEET OF COVER OVER THE TOP OF PIPE ARE TO BE INSULATED. INSULATION SHALL BE INSTALLED FROM THE CONNECTION OF THE SERVICE AT THE BUILDING TO THE POINT WHICH THE SERVICE ATTAINS 5 FEET OF COVER. CONTRACTOR SHALL OBTAIN WRITTEN PERMISSION FROM ARCHITECT OR ENGINEER PRIOR TO INSTALLATION OF INSULATION.
3. PROTECT ALL EXISTING STRUCTURES AND UTILITIES WHICH ARE NOT SCHEDULED TO BE REMOVED.
4. ALL SEWER AND WATER CROSSINGS SHALL HAVE A MINIMUM VERTICAL SEPARATION OF 1.5 FEET AND HORIZONTAL SEPARATION OF 10 FEET. FOLLOW ALL HEALTH DEPARTMENT AND CITY OF MINNEAPOLIS AND HENNEPIN COUNTY STANDARDS.
5. ALL WATER MAINS SHALL BE DUCTILE IRON PIPE, CLASS 52, UNLESS NOTED OTHERWISE.
6. ALL WATER MAIN SHALL HAVE A MINIMUM DEPTH OF COVER OF 7.5 FEET OVER TOP OF WATER MAIN.
7. PROVIDE THRUST BLOCKING ON ALL WATER MAIN PER CITY OF MINNEAPOLIS. PROVIDE MECHANICAL JOINT RESTRAINTS ON ALL BENDS, VALVES, TEES, PLUGS AND HYDRANT LEADS.
8. SANITARY SEWER PIPING SHALL BE PVC SDR 26 UNLESS NOTED OTHERWISE.
9. STORM SEWER PIPING SHALL BE POLY VINYL CHLORIDE (PVC) SDR 26, UNLESS NOTED OTHERWISE. ALL STORM SEWER PIPE THAT IS EXTENDED TO THE BUILDING FOR ROOF DRAIN SERVICES IS TO BE PVC, SCHEDULE 40. PVC PIPE AND FITTINGS SHALL CONFORM TO THE REQUIREMENTS OF ASTM D3034 (ASTM D2665 FOR SCHEDULE 40).
10. CONTRACTORS ARE TO COORDINATE ALL WORK WITH GAS, ELECTRIC, TELEVISION AND TELEPHONE COMPANIES PRIOR TO START OF CONSTRUCTION.
11. ALL PORTIONS OF THE STORM SEWER SYSTEM LOCATED WITHIN 10-FEET OF THE BUILDING OR WATER SERVICE LINE SHALL BE TESTED IN ACCORDANCE WITH MN PLUMBING CODE.
12. ALL JOINTS AND CONNECTIONS IN THE STORM SEWER SYSTEM SHALL BE GAS TIGHT OR WATER TIGHT IN ACCORDANCE TO MN PLUMBING CODE. APPROVED RESILIENT RUBBER JOINTS MUST BE USED TO MAKE WATER TIGHT CONNECTIONS TO MANHOLES, CATCH BASINS, AND OTHER STRUCTURES. GROUT RINGS ARE AN ACCEPTABLE ALTERNATIVE. CEMENT MORTAR JOINTS ARE PERMITTED ONLY FOR REPAIRS AND CONNECTIONS OF EXISTING LINES CONSTRUCTED WITH SUCH JOINTS.

STORM SEWER TABLE

STRUCTURE IDENTIFICATION	STRUCTURE DIMENSION (INCHES)	NEENAH CASTING	TOP ELEVATION	INVERT ELEVATION	PIPE LENGTH, DIAMETER, SLOPE & NEXT UPSTREAM STRUCTURE
EX MH 1	NA	NA	NA	NE. 855.50	33 L.F. OF 12" PVC PIPE @ 1.00%, CB 2
CB 2	48	R-2535	867.50	SW. 855.83 NE. 855.83	49 L.F. OF 12" PVC PIPE @ 0.50%, FILTER VAULT
FILTER VAULT	REFER TO CONTECH DETAIL			SW 856.08. NE. 859.13	8 L.F. OF 12" PVC PIPE @ 0.50%, CB 3
CB 3	48	R-2535	867.50	SW. 859.17 NE. 859.17 E. 859.17 SUMP 856.17	40 L.F. OF 12" PVC PIPE @ 0.50%, CB 4 3 L.F. OF 12" PVC PIPE @ 1.00%, ROOF DRAIN
CB 4	48	R-2535	862.00	SW. 859.37 NE. 859.37	45 L.F. OF 12" PVC PIPE @ 0.50%, CB 5
CB 5	48	R-2535	862.00	SW. 859.60 NE. 859.60	22 L.F. OF 12" PVC PIPE @ 0.50%, CB 6
CB 6	48	R-2535	869.50	SW. 859.71 NE. 859.71 E. 859.71	44 L.F. OF 12" PVC PIPE @ 0.50%, CB 7 3 L.F. OF 12" PVC PIPE @ 1.00%, ROOF DRAIN
CB 7	48	R-2535	862.80	SW. 859.93 E. 859.93	3 L.F. OF 12" PVC PIPE @ 1.00%, ROOF DRAIN

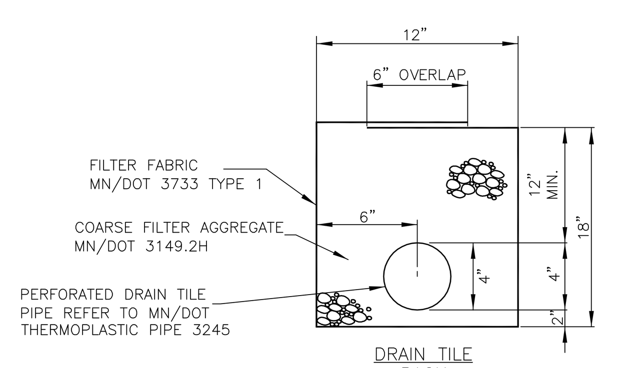

DRAIN TILE PACK

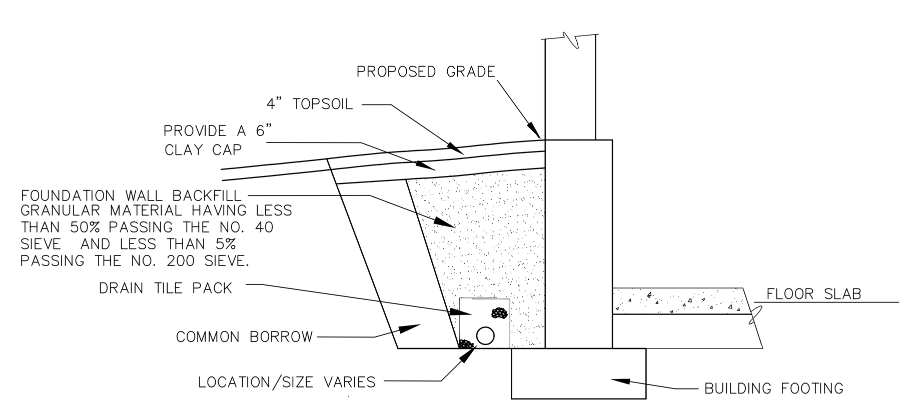

4 / C300 BUILDING PERIMETER DRAIN TILE
NOT TO SCALE

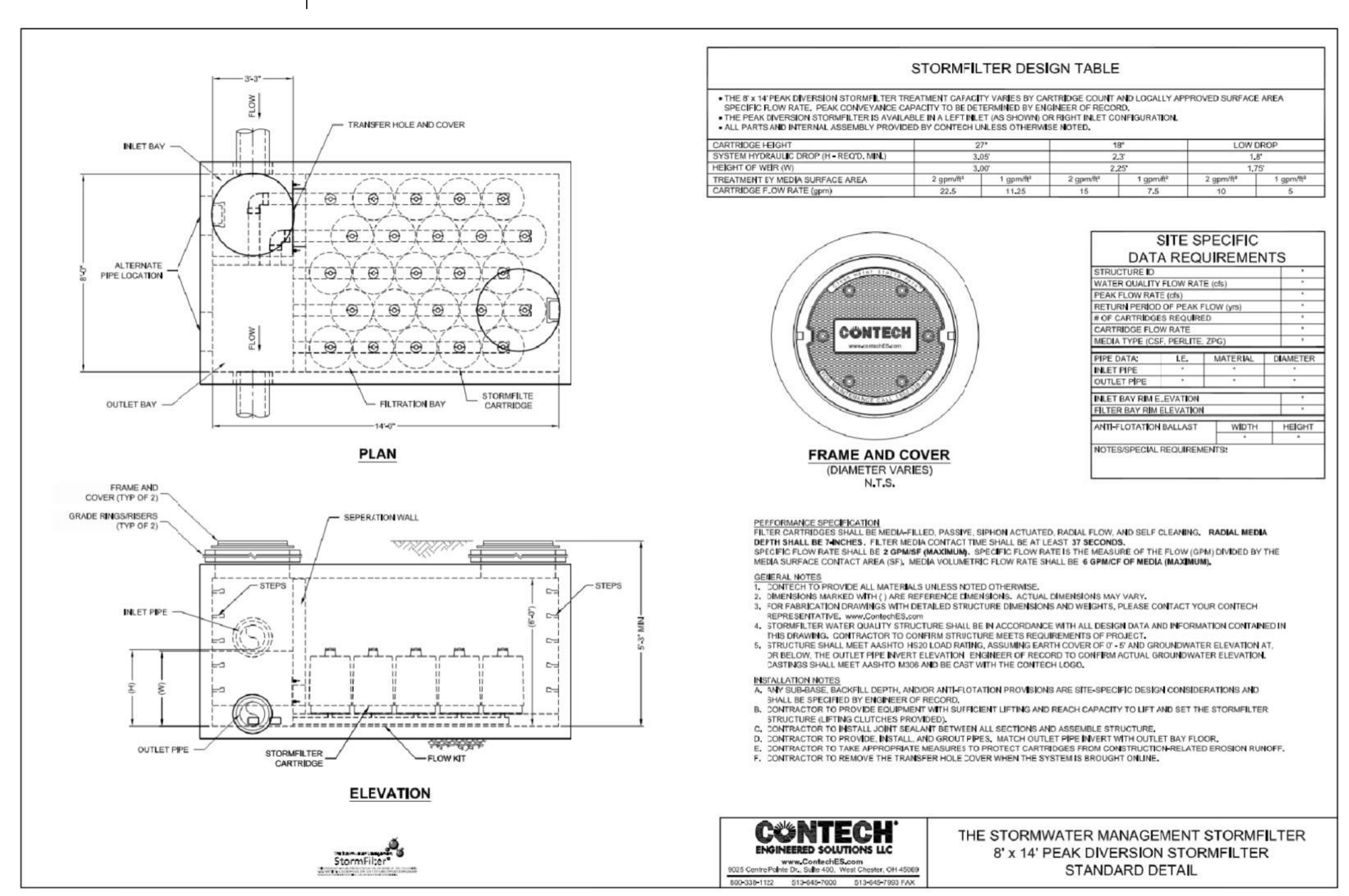

3 / C300 STORMWATER FILTER
NOT TO SCALE

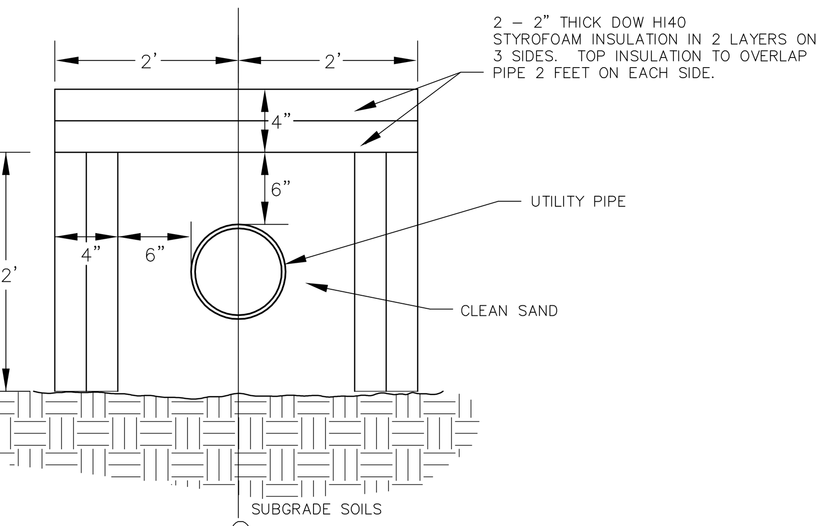

2 / C300 PIPE INSULATION
NOT TO SCALE

CUNINGHAM GROUP

Cuningham Group Architecture, Inc.

St. Anthony Main
201 Main St. SE
Suite 325
Minneapolis, MN 55414

Tel: 612 379 3400
Fax: 612 379 4400

www.cuningham.com

Consultant

BKBM

5930 Brooklyn Boulevard
Minneapolis, MN 55429-2518
Phone: (763) 843-0420
Fax: (763) 843-0421
www.bkbm.com

© 2015 BKBM Professional Engineers, Inc. All rights reserved. This document is an instrument of service and is the property of BKBM Professional Engineers, Inc. and may not be used or copied without prior written consent.

BKBM Job No. 14216.00

Revisions

No.	Date	Description

I hereby certify that this plan, specification or report was prepared by me or under my direct supervision and that I am a duly Licensed Professional Engineer under the laws of the state of Minnesota.

KEITH A. MATTE

Date	Lic. No.
XX/XX/20XX	46674

PDR RE-SUBMITTAL 12/11/2015

Document Phase:	PDR RE-SUBMITTAL
Date:	DECEMBER 11, 2015
PIC / AIC:	
Drawn By:	SJH
Checked By:	KAM
Comm. No.:	

Project Title

EPISCOPAL COMMONS

Sheet Title

Utility Plan

Sheet Number

C300

Copyright © 2013 by Cuningham Group Architecture, Inc. (All Rights Reserved)

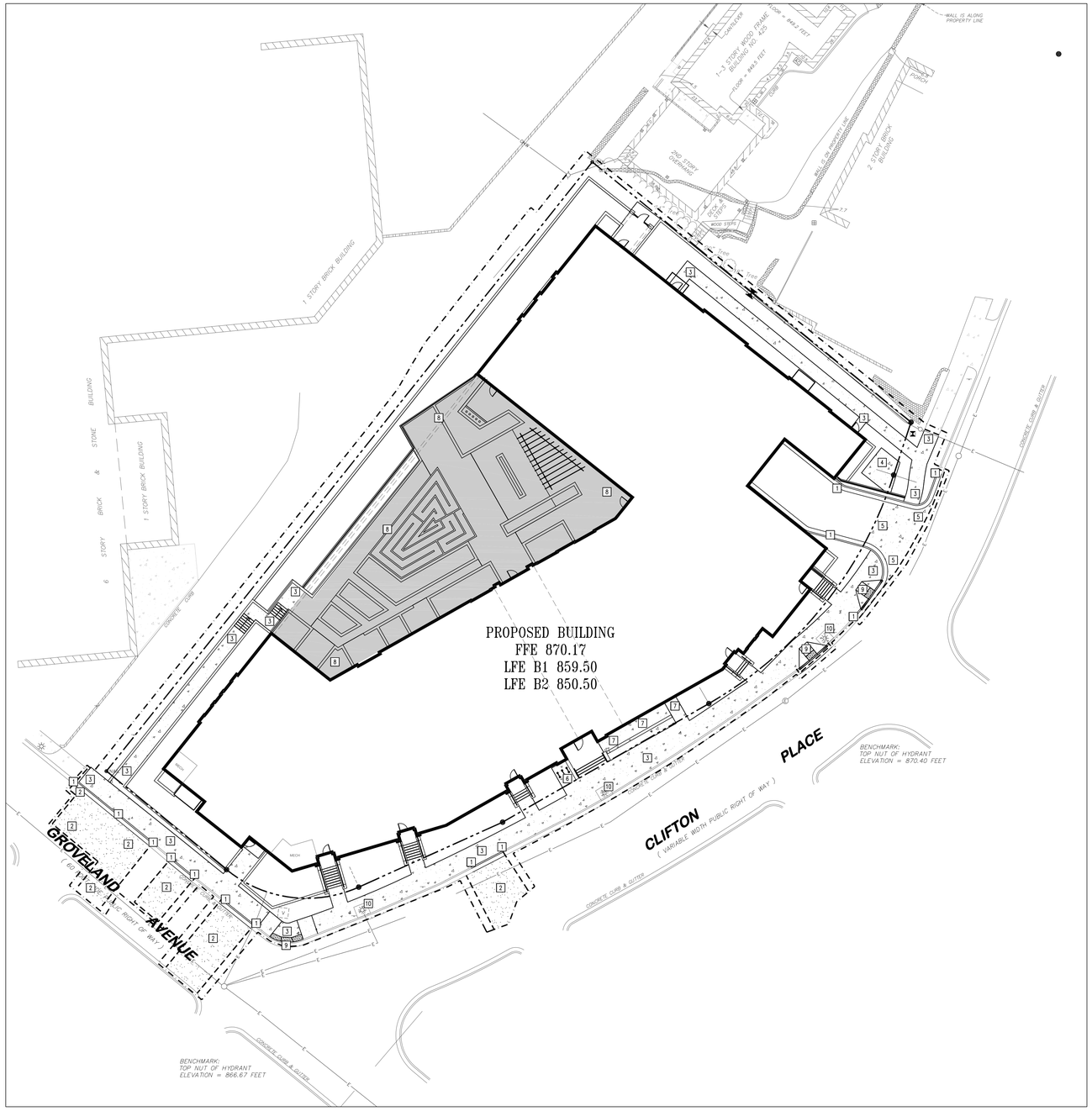

1 C400 PAVING AND GEOMETRIC PLAN
1"=20'

PROPOSED PLAN SYMBOLS

- CONSTRUCTION LIMITS
- PROPERTY LINE
- SAWCUT LINE (APPROX.)
- RETAINING WALL
- BITUMINOUS PAVEMENT
- CONCRETE PAVEMENT/SIDEWALK
- SEE LANDSCAPE PLANS FOR PAVEMENT DETAILS

ABBREVIATIONS

BM	Bench Mark
CONC	Concrete
ELEV	Elevation
EX	Existing
FFE	Finished Floor Elevation
LFE	Lower Floor Elevation
MAX	Maximum
MIN	Minimum
R	Radius
TYP.	Typical
MNMUTC D	Minnesota Manual on Uniform Traffic Control Devices

N

20' 10' 0 20' 40'
SCALE 1" = 20'

KEYED NOTES

KEYED NOTES ARE DENOTED BY NO ON PLAN.

1. INSTALL B624 CONCRETE CURB AND GUTTER. REFER TO DETAIL 7/C500.
2. INSTALL BITUMINOUS PAVEMENT. INTENT IS TO MATCH EXISTING PAVEMENT SECTION. FOR BIDDING REFER TO XXX. REFER TO DETAIL 9/C501.
3. INSTALL CONCRETE WALK. REFER TO DETAIL 7/C501. REFER TO LANDSCAPE PLANS FOR CONCRETE FINISH AND JOINTING. FOLLOW ALL CITY OF MINNEAPOLIS STANDARDS AND SPECIFICATIONS WHEN WORKING IN PUBLIC RIGHT-OF-WAY.
4. INSTALL CONCRETE PAD. REFER TO DETAIL 8/C501.
5. INSTALL CONCRETE DRIVE ENTRANCE. REFER TO DETAIL 4,5&6/C500.
6. INSTALL BIKE RACK. REFER TO ARCHITECTURAL PLANS.
7. INSTALL ACCESSIBLE RAMP. REFER TO ARCHITECTURAL PLANS.
8. REFER TO LANDSCAPE PLANS.
9. INSTALL PARALLEL AND DEPRESSED CORNER PEDESTRIAN CURB RAMPS. REFER TO DETAIL 2/C400.
10. EXISTING STREET LIGHT AND CONCRETE LIGHT PAD ARE EXISTING AND ARE TO REMAIN. REPAIR IF NEEDED TO ORIGINAL CONDITION.

GENERAL NOTES:

1. ALL DIMENSIONS ARE TO FACE OF CURB UNLESS NOTED OTHERWISE.
2. ALL CURB AND GUTTER IS TO BE B624 CONCRETE CURB AND GUTTER UNLESS NOTED OTHERWISE.
3. NO SIDEWALK IS TO HAVE MORE THAN A 2% CROSS SLOPE OR MORE THAN A 5% LONGITUDINAL SLOPE.
4. REFER TO ARCHITECTURAL PLANS FOR PROPOSED BUILDING LAYOUT.
5. FOLLOW ALL CITY OF MINNEAPOLIS AND HENNEPIN COUNTY RULES, REGULATIONS AND SPECIFICATIONS WHEN WORKING IN PUBLIC RIGHT OF WAY.
6. NO PONDING OF WATER OR ABRUPT TRANSITIONS WILL BE ALLOWED WHERE NEW PAVEMENT/CURB/SIDEWALK MATCHES INTO EXISTING PAVEMENT/CURB/SIDEWALK.
7. THE CONTRACTOR IS TO CONTACT THE CITY OF MINNEAPOLIS FIRE MARSHALL FOR THE EXACT PLACEMENT OF FIRE LANES, YELLOW-PAINTED CURBING AND NO PARKING AREAS FOR FIRE PROTECTION PURPOSES.

PAVING NOTES:

1. REFER TO STRUCTURAL PLANS FOR STOOP DETAILS. ALL WALKS ARE TO BE CENTERED ON THE DOORS.
2. INSTALL APPROPRIATE EXPANSION MATERIAL WHERE CONCRETE IS ADJACENT TO BUILDING FACE.
3. SAWCUT AND MATCH NEW BITUMINOUS PAVEMENT INTO EXISTING PAVEMENT. NO ABRUPT GRADE TRANSITIONS OR PONDING OF WATER WILL BE ALLOWED.
4. MATCH NEW CONCRETE CURB AND GUTTER INTO EXISTING. FOLLOW ALL CITY OF MINNEAPOLIS STANDARDS AND SPECIFICATIONS FOR CURB TYPE, MATERIAL AND INSTALLATION METHODS.
5. SAWCUT EXISTING BITUMINOUS PAVEMENT AND CURB AND GUTTER TO NEAREST JOINT. COORDINATE REMOVAL LIMITS WITH SITE DEMOLITION CONTRACTOR AND CONSTRUCTION MANAGER. INSTALL DRIVE ENTRANCE PER CITY OF MINNEAPOLIS STANDARDS AND SPECIFICATIONS. FOLLOW ALL CITY OF MINNEAPOLIS AND HENNEPIN COUNTY REQUIREMENTS FOR TRAFFIC CONTROL.

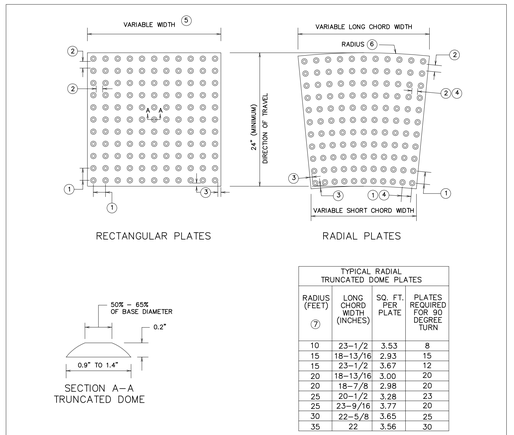

TYPICAL RADIAL TRUNCATED DOME PLATES

RADIUS (FEET) 7	LONG CHORD WIDTH (INCHES)	SQ. FT. PER PLATE	PLATES REQUIRED FOR 90 DEGREE TURN
10	23-1/2	3.53	8
15	18-13/16	2.93	15
15	23-1/2	3.67	12
20	18-13/16	3.00	20
20	18-7/8	2.98	20
25	20-1/2	3.28	23
25	23-9/16	3.77	20
30	22-5/8	3.65	25
35	22	3.56	30

NOTES:

DETECTABLE WARNING SURFACES SHALL FOLLOW THE PUBLIC RIGHTS-OF-WAY ACCESSIBILITY GUIDELINES (PROWAG).

DETECTABLE WARNINGS CONSIST OF TRUNCATED DOMES ALIGNED IN A SQUARE OR RADIAL GRID PATTERN.

DETECTABLE WARNINGS ARE REQUIRED:
- WHERE RAMPS, LANDINGS, OR BLENDED TRANSITIONS PROVIDE A FLUSH PEDESTRIAN CONNECTION TO THE ROADWAY.
- WHERE PEDESTRIAN ACCESS ROUTES CROSS COMMERCIAL DRIVEWAYS THAT ARE PROVIDED WITH TRAFFIC CONTROL DEVICES OR OTHERWISE PERMITTED TO OPERATE LIKE A PUBLIC ROADWAY.
- AT PEDESTRIAN RAILWAY CROSSINGS.
- ON RAIL PLATFORMS WHERE BOARDING EDGES ARE NOT PROTECTED.

DETECTABLE WARNINGS SHALL EXTEND:
- A MINIMUM OF 24" IN THE DIRECTION OF TRAVEL.
- THE FULL WIDTH OF THE RAMP, LANDING, OR BLENDED TRANSITION, WITHIN 2" OF FULL WIDTH ON EITHER END.
- THE FULL LENGTH OF THE PUBLIC USE AREA OF A RAIL PLATFORM.

DETECTABLE WARNING SURFACES SHALL CONTRAST VISUALLY WITH ADJACENT GUTTER, ROADWAY, OR WALKWAY, EITHER A LIGHT-ON-DARK OR DARK-ON-LIGHT. CONTRAST MAY BE PROVIDED ON THE FULL RAMP SURFACE, EXCLUDING THE FLARED SIDES.

FOR MN/DOT PROJECTS, SEE MN/DOT'S APPROVED/QUALIFIED PRODUCT LISTS.

DETECTABLE WARNING SURFACE SHALL BE PAID FOR AS TRUNCATED DOMES BY THE SQUARE FOOT.

ALL TRUNCATED DOME SYSTEMS SHALL BE PLACED IN STRICT ACCORDANCE WITH THE RECOMMENDATIONS OF THE MANUFACTURER.

1. CENTER TO CENTER DOME SPACING: 1.6" MINIMUM, 2.4" MAXIMUM.
2. BASE TO BASE DOME SPACING: 0.65" MINIMUM.
3. DOME BASE TO PLATE EDGE SPACING: 0.35" MINIMUM, 0.75" MAXIMUM.
4. SPACING VARIES ON RADIAL PLATES.
5. TYPICAL WIDTHS AVAILABLE: 12", 18", 24", 30", 36". CHECK WITH MANUFACTURERS FOR AVAILABLE WIDTHS.
6. ON RADIAL PLATE, RADIUS DEFINED AT BACK OF CURB.
7. TYPICAL RADII. CHECK WITH MANUFACTURERS FOR AVAILABLE RADII.

	STATE OF MINNESOTA DEPARTMENT OF TRANSPORTATION	SPECIFICATION REFERENCE	STANDARD PLATE NO.
	DETECTABLE WARNING SURFACE TRUNCATED DOMES	2531	7038A

NOTE:
FOR ADA COMPLIANT PEDESTRIAN RAMPS, REFER TO MN/DOT STANDARD PLAN 5-297.250 PEDESTRIAN CURB RAMP DETAILS AT THE FOLLOWING WEB ADDRESS:
HTTP://STANDARDPLATES.DOT.STATE.MN.US/STDPLATE.ASPX

CONTRACTOR SHALL COORDINATE FINAL CURB RAMP LOCATION AND PEDESTRIAN CURB RAMP DETAIL WITH THE CITY AND OWNER PRIOR TO INSTALLATION.

2 C400 PEDESTRIAN CURB RAMP
NOT TO SCALE

CUNINGHAM GROUP

Cuningham Group Architecture, Inc.

St. Anthony Main
201 Main St. SE
Suite 325
Minneapolis, MN
55414

Tel: 612 379 3400
Fax: 612 379 4400

www.cuningham.com

Consultant

BKBM

5930 Brooklyn Boulevard
Minneapolis, MN 55429-2518
Phone: (763) 843-0420
Fax: (763) 843-0421
www.bkbm.com

© 2015 BKBM Professional Engineers, Inc.
The plans, specifications, and reports are instrument of service and is the property of BKBM Professional Engineers, Inc. and may not be reproduced or used without written consent.

BKBM Job No. 142161.00

Revisions

No.	Date	Description

I hereby certify that this plan, specification or report was prepared by me or under my direct supervision and that I am a duly Licensed Professional Engineer under the laws of the state of Minnesota.

KEITH A. MATTE

Date XX/XX/20XX — Lic. No. 46674

PDR RE-SUBMITTAL 12/11/2015

Document Phase:	PDR RE-SUBMITTAL
Date:	DECEMBER 11, 2015
PIC / AIC:	
Drawn By:	SJH
Checked By:	KAM
Comm. No.:	

Project Title

EPISCOPAL COMMONS

Sheet Title

Paving and Geometric Plan

Sheet Number

C400

Copyright © 2013 by Cuningham Group Architecture, Inc. (All Rights Reserved)

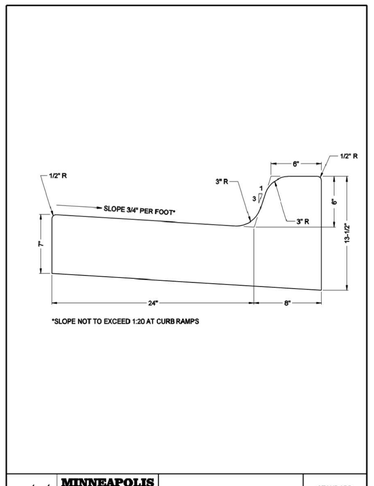

7 C500 B–624 CURB & GUTTER
NOT TO SCALE

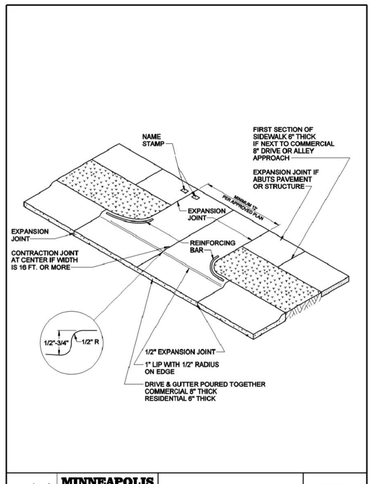

5 C500 TYPICAL DRIVEWAY
NOT TO SCALE

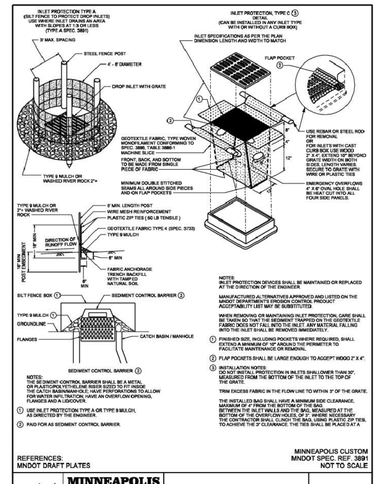

3 C500 INLET PROTECTION TYPE A & C
NOT TO SCALE

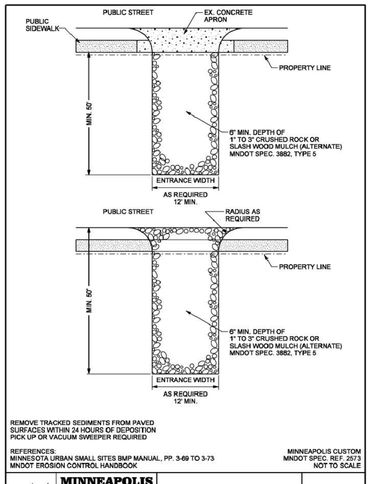

1 C500 SEDIMENT CONTROL–ROCK ENTRANCE
NOT TO SCALE

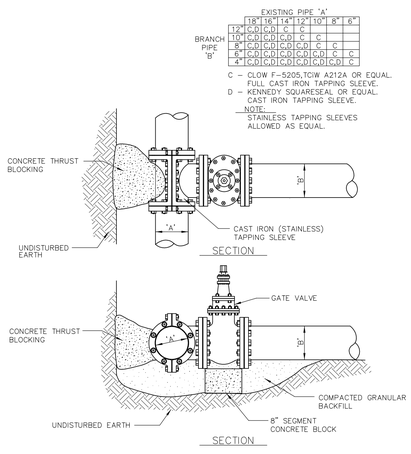

8 C500 WATERMAIN WET TAP (TYP.)
NOT TO SCALE

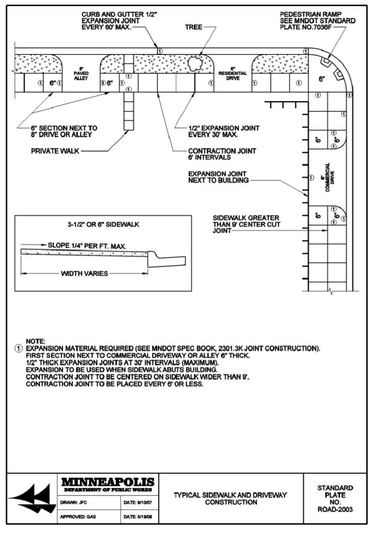

6 C500 TYPICAL SIDEWALK & DRIVEWAY CONSTRUCTION
NOT TO SCALE

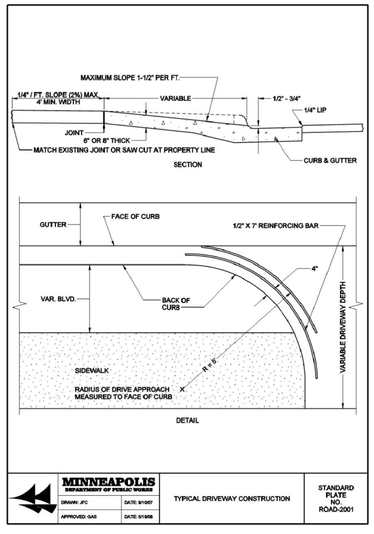

4 C500 TYPICAL DRIVEWAY CONSTRUCTION
NOT TO SCALE

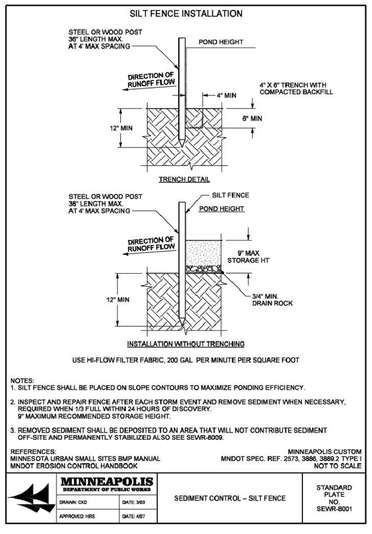

2 C500 SEDIMENT CONTROL–SILT FENCE
NOT TO SCALE

CUNINGHAM GROUP

Cuningham Group Architecture, Inc.

St. Anthony Main
201 Main St. SE
Suite 325
Minneapolis, MN
55414

Tel: 612 379 3400
Fax: 612 379 4400

www.cuningham.com

Consultant

BKBM

5930 Brooklyn Boulevard
Minneapolis, MN 55429-2518
Phone: (763) 843-0420
Fax: (763) 843-0421
www.bkbm.com

©
2010 BKBM Professional Engineers, Inc.
The plans, specifications, and reports are instrument of service and is the property of BKBM Professional Engineers, Inc. and may not be used without written consent.

BKBM Job No. 14216.00

Revisions

No.	Date	Description

I hereby certify that this plan, specification or report was prepared by me or under my direct supervision and that I am a duly Licensed Professional Engineer under the laws of the state of Minnesota.

KEITH A. MATTE

Date	Lic. No.
XX/XX/20XX	46674

PDR RE-SUBMITTAL 12/11/2015

Document Phase:	PDR RE-SUBMITTAL
Date:	DECEMBER 11, 2015
PIC / A/C:	
Drawn By:	SJH
Checked By:	KAM
Comm. No.:	

Project Title

EPISCOPAL COMMONS

Sheet Title

Civil Details Sheet

Sheet Number

C500

Copyright © 2010 by Cuningham Group Architecture, Inc. (All Rights Reserved)

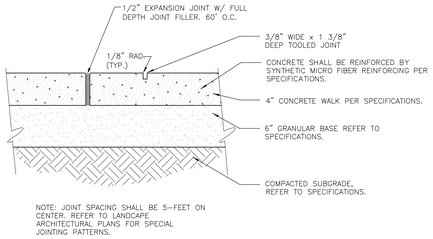

NOTE: JOINT SPACING SHALL BE 5-FEET ON CENTER. REFER TO LANDCAPE ARCHITECTURAL PLANS FOR SPECIAL JOINTING PATTERNS.

7 C501 CONCRETE SIDEWALK CONSTRUCTION (TYP.)
NOT TO SCALE

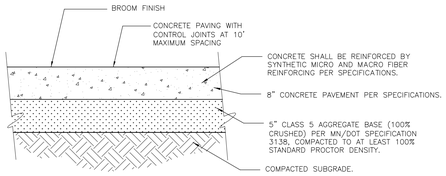

NOTE: JOINT SPACING SHALL NOT EXCEED 24 TO 30 TIMES THE PAVEMENT THICKNESS WITH A MAXIMUM OF 15 FEET.

8 C501 CONCRETE PAVEMENT
NOT TO SCALE

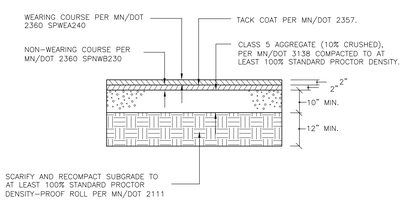

9 C501 BITUMINOUS PAVEMENT
NOT TO SCALE

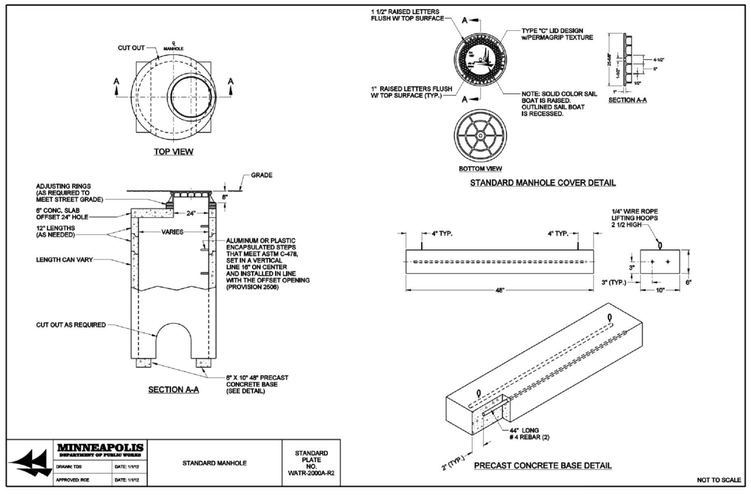

10 C501 TYPICAL WATER MANHOLE STANDARD DETAILS
NOT TO SCALE

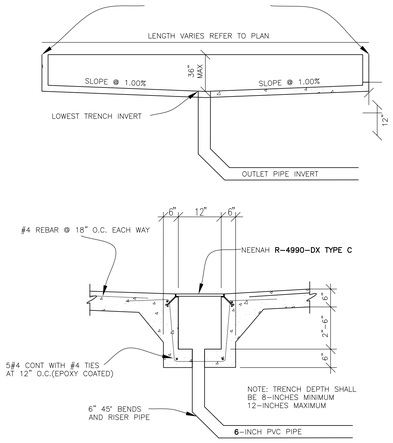

4 C501 TRENCH DRAIN DETAIL
NOT TO SCALE

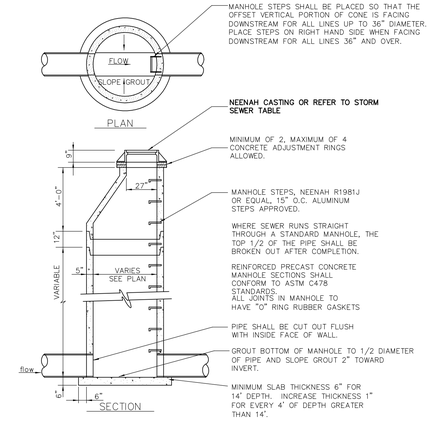

5 C501 STORM SEWER MANHOLE/CATCH BASIN
NOT TO SCALE

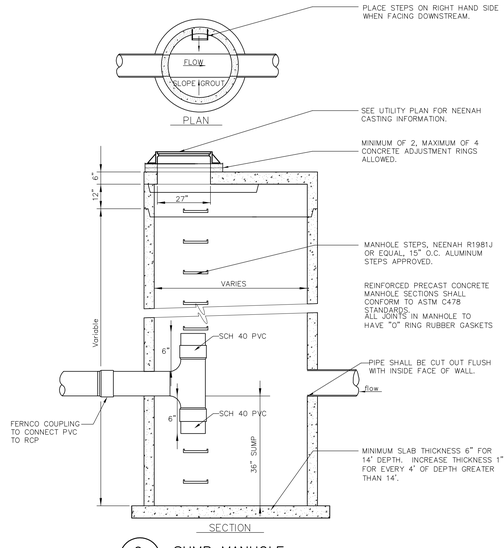

6 C501 SUMP MANHOLE
NOT TO SCALE

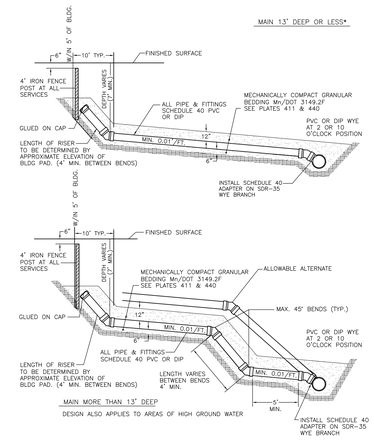

1 C501 SANITARY SEWER CONNECTIONS
NOT TO SCALE

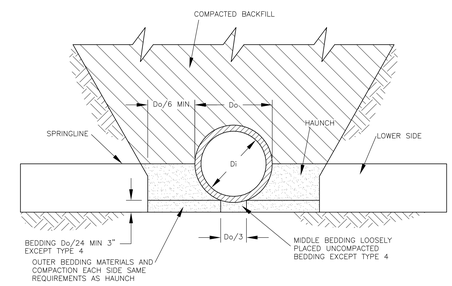

STANDARD TRENCH INSTALLATION SOIL AND MINIMUM STANDARD PROCTOR COMPACTION REQUIREMENTS		
INSTALLATION TYPE	HAUNCH AND OUTER BEDDING	LOWER SIDE
TYPE 1	95% CATEGORY I	90% CATEGORY I 95% CATEGORY II 100% CATEGORY III
TYPE 2	90% CATEGORY I 95% CATEGORY II	85% CATEGORY I 90% CATEGORY II 95% CATEGORY III
TYPE 3	85% CATEGORY I 90% CATEGORY II 95% CATEGORY III	85% CATEGORY I 90% CATEGORY II 95% CATEGORY III
TYPE 4	NO COMPACTION REQUIRED, EXCEPT IF CATEGORY III USE 85% CATEGORY III	NO COMPACTION REQUIRED, EXCEPT IF CATEGORY III USE 85% CATEGORY III

EQUIVALENT SOIL CLASSIFICATIONS FOR SOIL DESIGNATIONS		
SOIL	UNIFIED SOIL CLASSIFICATION SYSTEM (USCS)	MN/DOT SPECIFICATION
CATEGORY I	CLEAN COURSE GRAINED SOILS: SW, SP, GW, GP, OR ANY SOIL BEGINNING WITH ONE OF THESE SYMBOLS WITH 12% OR LESS PASSING A #200 SIEVE	COARSE FILTER AGGREGATE MN/DOT 3149.2H
CATEGORY II	COURSE GRAINED SOILS WITH FINES: GM, GC, SM, SC, OR ANY SOIL BEGINNING WITH ONE OF THESE SYMBOLS CONTAINING MORE THAN 12% PASSING A #200 SIEVE	AGGREGATE BEDDING MN/DOT 3149.2G
CATEGORY III	FINE GRAINED SOILS: CL, ML, (OR CL-ML, CL.ML, ML/CL) WITH LESS THAN 30% RETAINED ON A #200 SIEVE.	NOT APPLICABLE

NOTES:
1. COMPACTION AND SOIL SYMBOLS-I.E. "95% CATEGORY I" REFERS TO CATEGORY I SOIL MATERIAL WITH MINIMUM STANDARD PROCTOR COMPACTION OF 95%.
2. SOIL IN BEDDING AND HAUNCH ZONES SHALL BE COMPACTED TO AT LEAST THE SAME COMPACTION AS SPECIFIED FOR THE MAJORITY OF SOIL IN THE BACKFILL ZONE.
3. THE TRENCH WIDTH SHALL BE WIDER THAN SHOWN IF REQUIRED FOR ADEQUATE SPACE TO ATTAIN SPECIFIED COMPACTION IN THE HAUNCH AND BEDDING ZONES.
4. FOR TRENCH WALLS WITH GREATER THAN 10 DEGREE SLOPES THAT CONSIST OF EMBANKMENT, THE LOWER SIDE SHALL BE COMPACTED TO AT LEAST THE SAME COMPACTION AS SPECIFIED FOR THE SOIL IN THE BACKFILL ZONE.
5. NO BEDDING IS REQUIRED FOR TYPE 4 STANDARD INSTALLATION.
6. REFER TO ASTM C1479-07 FOR DETAILS.
7. TYPE III BEDDING SHALL BE USED UNLESS NOTED OTHERWISE.

2 C501 TYPICAL PIPE BEDDING FOR RCP AND DIP
NOT TO SCALE

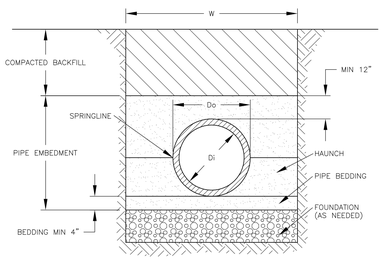

NOTES:
1. THE MINIMUM TRENCH WIDTH "W" SHALL BE W=Do+16" OR 1.25*Do+12 WHICHEVER IS GREATER.
2. PIPE EMBEDMENT MATERIAL SHALL BE CLASS I OR CLASS II MATERIAL. REFER TO SPECIFICATIONS FOR DETAILS.
3. REFER TO ASTM D2321-05 "UNDERGROUND INSTALLATION OF THERMOPLASTIC PIPE FOR SEWERS AND OTHER GRAVITY-FLOW APPLICATIONS" FOR DETAILS.

3 C501 TYPICAL PIPE BEDDING FOR PVC
NOT TO SCALE

CUNINGHAM GROUP

Cuningham Group Architecture, Inc.

St. Anthony Main
201 Main St. SE
Suite 325
Minneapolis, MN
55414

Tel: 612 379 3400
Fax: 612 379 4400

www.cuningham.com

Consultant

BKBM

5930 Brooklyn Boulevard
Minneapolis, MN 55429-2518
Phone: (763) 843-0420
Fax: (763) 843-0421
www.bkbm.com

©
2010 BKBM Professional Engineers, Inc.
All drawings and written material appearing herein constitute original and unpublished work of service and is the property of BKBM Professional Engineers, Inc. and may not be used without written consent of BKBM Professional Engineers, Inc.

BKBM Job No. 142160.00

Revisions

No.	Date	Description

I hereby certify that this plan, specification or report was prepared by me or under my direct supervision and that I am a duly Licensed Professional Engineer under the laws of the state of Minnesota.

KEITH A. MATTE

Date XX/XX/20XX

Lic. No. 46674

PDR RE-SUBMITTAL 12/11/2015

Document Phase:	PDR RE-SUBMITTAL
Date:	DECEMBER 11, 2015
PIC / AIC:	
Drawn By:	SJH
Checked By:	KAM
Comm. No.:	

Project Title

EPISCOPAL COMMONS

Sheet Title

Civil Details Sheet

Sheet Number

C501

Copyright © 2015 by Cuningham Group Architecture, Inc. (All Rights Reserved)

NOTE:
THE CONTRACTOR MUST COMPLETE, SIGN, OBTAIN OWNERS SIGNATURE, PAY FEE, AND SEND IN THE NPDES PERMIT APPLICATION.

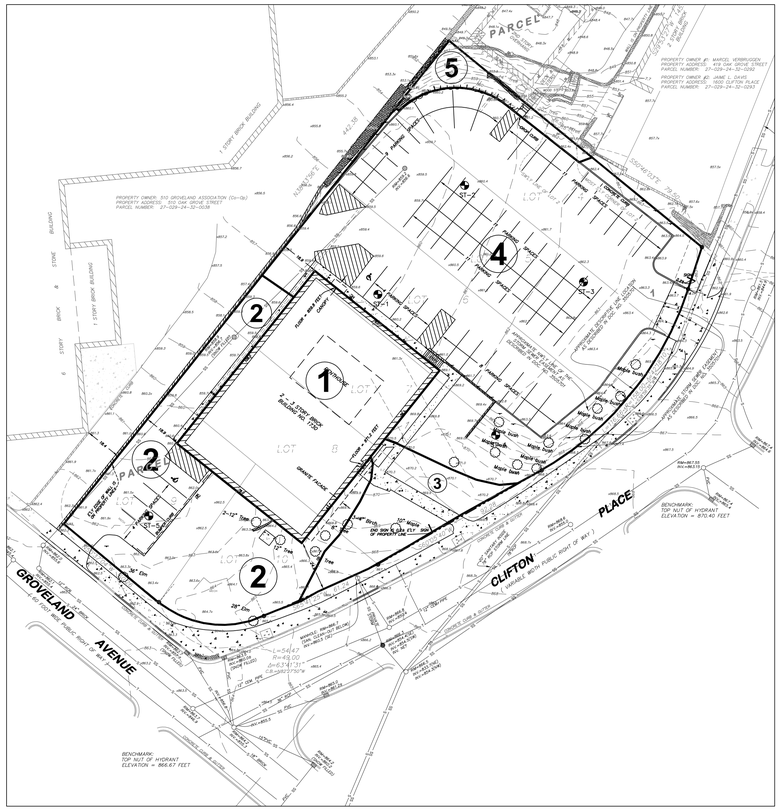

1 C600 EXISTING CONDITIONS
1"=30'

OWNER:
EPISCOPAL HOMES
ATTN MARVIN PLAKUT
490 EAST LYNNHURST AVENUE
ST. PAUL, MN 55104

TELEPHONE: 651-632-8801

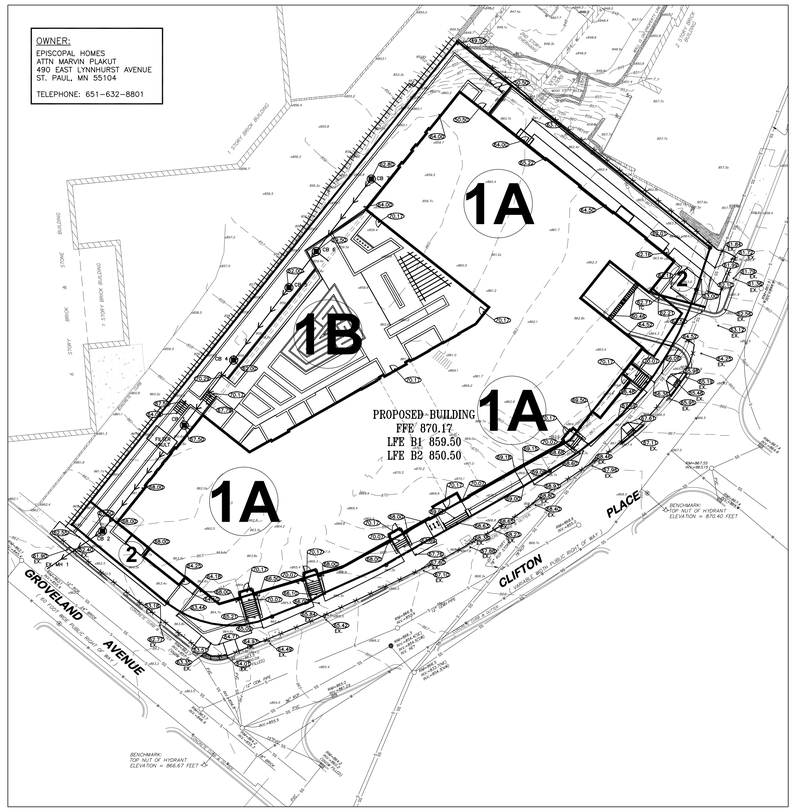

2 C600 PROPOSED CONDITIONS
1"=30'

EXISTING DRAINAGE AREAS							
DRAINAGE AREA	IMPERVIOUS AREA (ACRES)	PERVIOUS AREA (ACRES)	TOTAL AREA (ACRES)	Q OUT (CFS) STORM EVENT			ROUTING
				2-YEAR (2.75")	10-YEAR (4.15")	100-YEAR (5.90")	
1	0.19	0.00	0.19	0.77	1.18	1.68	
2	0.10	0.11	0.21	0.42	0.76	1.24	
3	0.01	0.06	0.07	0.06	0.15	0.29	
4	0.45	0.09	0.54	1.84	2.89	4.25	
5	0.00	0.02	0.02	0.01	0.04	0.08	
TOTAL	0.76	0.28	1.03	3.10	5.02	7.54	

PROPOSED DRAINAGE AREAS							
DRAINAGE AREA	IMPERVIOUS AREA (ACRES)	PERVIOUS AREA (ACRES)	TOTAL AREA (ACRES)	Q OUT (CFS) STORM EVENT			ROUTING
				2-YEAR (2.75")	10-YEAR (4.15")	100-YEAR (5.90")	
1	0.77	0.16	0.93	1.61	2.27	3.13	FILTER
2	0.07	0.03	0.10	0.15	0.35	0.66	ROW
TOTAL	0.84	0.19	1.03	1.76	2.62	3.79	

STORMWATER RUNOFF SUMMARY			
	2-YR STORM (2.75") RUNOFF (CFS)	10-YR STORM (4.15") RUNOFF (CFS)	100-YR STORM (5.90") RUNOFF (CFS)
EXISTING SITE	3.10	5.02	7.54
PROPOSED SITE	1.76	2.62	3.79

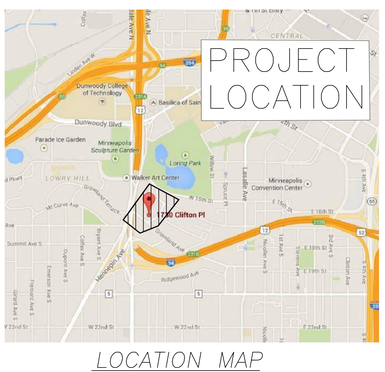

LOCATION MAP
©COPYRIGHT GOOGLE MAPS

PROJECT NARRATIVE

EXISTING SITE DESCRIPTION -- THE 1.03 ACRE PARCEL IS CURRENTLY HOME TO THE EPISCOPAL CHURCH OF MINNESOTA OFFICE. THE SITE IS APPROXIMATELY 74% IMPERVIOUS AND DOES NOT HAVE ANY STORMWATER MANAGEMENT DEVICES. STORMWATER SHEET FLOWS TO THE PUBLIC ROW ON CLIFTON PLACE AND GROVELAND AVENUE AND TO THE PRIVATE ALLEY ON THE NORTHWEST OF THE SITE.

PROPOSE SITE DESCRIPTION -- THE PROPOSED PROJECT IS A MULTI-STORY RESIDENTIAL BUILDING WITH SOME OFFICE SPACE. THE BUILDING WILL HAVE TWO STORIES OF UNDERGROUND PARKING. THE SITE IMPERVIOUSNESS WILL CHANGE TO APPROXIMATELY 80%. STORMWATER MANAGEMENT WILL BE ACCOMPLISH BY A COMBINATION OF ROOF TOP PONDING BY WAY OF RESTRICTED FLOW INLETS AND A STORMWATER FILTER. THE STORMWATER FILTER WILL FILTER THE RUNOFF FROM 90% OF THE SITE DURING THE 1.25 INCH RAIN EVENT. HIGH FLOW EVENTS WILL BE ROUTED THROUGH AND INTERNAL BYPASS.

ABBREVIATIONS	
BLDG	Building
BMP	Best Management Practice
BW	Bottom of Wall
CB	Catch Basin
CONC	Concrete
ELEV	Elevation
EX	Existing
FFE	Finished Floor Elevation
HWL	High Water Level
INV	Invert
MAX	Maximum
MH	Manhole
MIN	Minimum
MPCA	Minnesota Pollution Control Agency
NPDES	National Pollutant Discharge Elimination System
NWL	Normal Water Level
PVC	Polyvinyl Chloride
RCP	Reinforced Concrete Pipe
TW	Top of Wall
W.O.	Washout

NOTE:
THE STORM WATER POLLUTION PREVENTION PLAN FOR THIS PROJECT INCLUDES THE CIVIL ENGINEERING PLANS AND THE PROJECT MANUAL.

CONTRACTOR TO SUPPLY CONSTRUCTION PHASING NARRATIVE, ESTIMATED PRELIMINARY QUANTITIES OF ALL EROSION PREVENTION AND SEDIMENT CONTROL BMP'S ANTICIPATED AT THE START OF THE PROJECT AND FOR THE LIFE OF THE PROJECT, AND LOCATION OF AREAS WHERE CONSTRUCTION WILL BE PHASED TO MINIMIZE DURATION OF EXPOSED SOIL AREAS. CONTRACTOR IS TO REVIEW MINNESOTA POLLUTION CONTROL AGENCY'S INSTRUCTIONS FOR THE APPLICATION FOR MINNESOTA'S NPDES/SDS GENERAL STORMWATER PERMIT FOR CONSTRUCTION ACTIVITY PRIOR TO SUBMITTING APPLICATION.

INSPECTIONS

EXPOSED SOIL AREAS: ONCE EVERY 7 DAYS AND WITHIN 24 HOURS FOLLOWING A 1/2 INCH OVER 24 HOURS RAIN EVENT.

STABILIZED AREAS: ONCE EVERY 30 DAYS.

FROZEN GROUND: AS SOON AS RUNOFF OCCURS OR PRIOR TO RESUMING CONSTRUCTION.

RECORDS: A COPY OF THE GRADING, DRAINAGE EROSION CONTROL PLAN AND WATERSHED DATA & SWPPP PLANS AS WELL AS THE INSPECTIONS/MAINTENANCE LOGS ARE TO BE KEPT EITHER IN THE FIELD OFFICE, INSPECTOR'S VEHICLE OR CONTRACTOR'S VEHICLE.

FINAL STABILIZATION

STABILIZATION BY UNIFORM PERENNIAL VEGETATIVE COVER (70% DENSITY)

DRAINAGE DITCHES STABILIZED.

ALL TEMPORARY SYNTHETIC AND STRUCTURAL BMP'S REMOVED.

CLEAN OUT SEDIMENT FROM CONVEYANCES AND SEDIMENTATION BASINS (RETURN TO DESIGN CAPACITY).

GRADING & SOILS

BASED ON SOIL BORING PROVIDED BY XXXXX: THE FOLLOWING SOILS ARE ANTICIPATED TO BE ONSITE AT THE DEPTH SPECIFIED BELOW GRADE:

0-7 FEET - FILL: SILTY SAND FINE GRAINED, MOIST.
4-26 FEET - SP-SM: POORLY GRADED SAND
7-14 FEET - ML: SILT W/LAYERS OF SAND (ST-2)

REFER TO THE GEOTECHNICAL REPORT FOR ADDITIONAL INFORMATION.

AGENCY CONTACTS

CITY OF MINNEAPOLIS
ENGINEERING DEPARTMENT
CITY OF LAKE BUILDING
309 2ND AVENUE S ROOM 301
MINNEAPOLIS, MN 55401
PHONE: (612) 673-5591

MINNESOTA POLLUTION CONTROL AGENCY
520 LAFAYETTE ROAD
SAINT PAUL, MN 55155
PHONE: (651) 296-6300

MISSISSIPPI WATERSHED
MANAGEMENT ORGANIZATION
2522 MARSHALL ST. NE
MIKNNEPOLIS, MN 55418-3329
PHONE: (612 465-8780

MECHANICAL AND NON STORMWATER DISCHARGES, EXISTING AND PROPOSED

1. WATER LINE FLUSHING
2. LANDSCAPE IRRIGATION
3. FOUNDATION DRAINS
4. AIR CONDITIONING CONDENSATION
5. RESIDENTIAL BUILDING WASH WATERS WITHOUT DETERGENTS.

N

30' 15' 0 30' 60'
SCALE 1" = 30'

POLLUTION PREVENTION MANAGEMENT MEASURES

SOLID WASTE DISPOSED PROPERLY; COMPLY WITH MPCA REQUIREMENTS.

HAZARDOUS WASTE STORED (SECONDARY CONTAINMENT, RESTRICTED ACCESS) AND DISPOSED IN COMPLIANCE WITH MPCA REQUIREMENTS.

EXTERNAL WASHING OF TRUCKS AND OTHER CONSTRUCTION VEHICLES MUST BE LIMITED TO A DEFINED AREA OF THE SITE. RUNOFF MUST BE CONTAINED AND WASTE PROPERLY DISPOSED.

NO ENGINE DEGREASING ALLOWED ON-SITE.

CONCRETE WASHOUT ON-SITE: ALL LIQUID AND SOLID WASTES GENERATED BY CONCRETE WASHOUT OPERATIONS MUST BE CONTAINED IN A LEAK-PROOF CONTAINMENT FACILITY OR IMPERMEABLE LINER. A COMPACTED CLAY LINER THAT DOES NOT ALLOW LIQUIDS TO ENTER GROUND WATER IS CONSIDERED AN IMPERMEABLE LINER. THE LIQUID AND SOLID WASTES MUST NOT CONTACT THE GROUND, AND THERE MUST NOT BE RUNOFF FROM THE CONCRETE WASHOUT OPERATIONS OR AREAS. LIQUID AND SOLID WASTES MUST BE DISPOSED OF PROPERLY AND IN COMPLIANCE WITH MPCA REGULATIONS. A SIGN MUST BE INSTALLED ADJACENT TO EACH WASHOUT FACILITY TO INFORM CONCRETE EQUIPMENT OPERATORS TO UTILIZE THE PROPER FACILITIES. THE CONCRETE WASHOUT AREA INDICATED ON THE PLANS IS SHOWN IN AN APPROXIMATE LOCATION. PRIOR TO THE START OF CONSTRUCTION, THE CONTRACTOR SHALL DETERMINE THE EXACT LOCATION IN ACCORDANCE WITH MPCA REQUIREMENTS.

CONSTRUCTION ACTIVITY EROSION PREVENTION PRACTICES

PROVIDE TEMPORARY PROTECTION OR PERMANENT COVER FOR EXPOSED SOIL AREAS WITH A CONTINUOUS POSITIVE SLOPE WITHIN 200 FEET OF A SURFACE WATER, CURB AND GUTTER, CATCH BASIN, OR ANY STORM WATER CONVEYANCE SYSTEM CONNECTED TO ANY OF THE ABOVE WITHIN THE FOLLOWING TIME FRAME:

THE TIME AN AREA CAN REMAIN OPEN WHEN NOT ACTIVELY BEING WORKED ON:
SLOPES STEEPER THAN 3:1 - 7 DAYS
SLOPES 10:1 TO 3:1 - 14 DAYS
SLOPES FLATTER THAN 10:1 - 14 DAYS

DITCHES THAT CONNECT TO A SURFACE WATER MUST BE STABILIZED WITHIN 200-FEET FROM THE EDGE OF PROPERTY OR WITHIN 200-FEET TO ANY SURFACE WATER WITHIN 24-HOURS.

PIPE OUTLETS MUST BE PROVIDED WITH TEMPORARY OR PERMANENT ENERGY DISSIPATION WITHIN 24-HOURS AFTER CONNECTION TO A SURFACE WATER.

SEDIMENT CONTROL MEASURES MUST BE INSTALLED ON ALL DOWN GRADIENT PERIMETERS BEFORE ANY UPGRADIENT LAND DISTURBING ACTIVITIES BEGIN.

SEDIMENT AND EROSION CONTROL MAINTENANCE

PERIMETER SEDIMENT CONTROL PRACTICES: WHEN SEDIMENT REACHES 1/3 THE HEIGHT OF THE BMP, THE SEDIMENT MUST BE REMOVED WITHIN 24 HOURS. IF PERIMETER SEDIMENT CONTROL HAS BEEN DAMAGED OR IS NOT FUNCTIONING PROPERLY, IT MUST BE REPAIRED AND/OR REPLACED WITHIN 24 HOURS. PERIMETER BMP MEASURES MAY INCLUDE SILT FENCING.

CONSTRUCTION SITE VEHICLE EXIT LOCATIONS: ALL TRACKED SEDIMENT ONTO PAVED SURFACES MUST BE REMOVED WITHIN 24 HOURS OF DISCOVERY OR MORE FREQUENTLY IF REQUIRED BY CITY OR WATERSHED.

CONSTRUCTION SITE DEWATERING: SITE WATER DISCHARGE DUE TO CONSTRUCTION DEWATERING OPERATIONS SHALL BE MONITORED FOR SEDIMENTATION AND TREATED PRIOR TO DISCHARGE TO PUBLIC STORM SEWERS. TREATMENT OF DEWATERING DISCHARGE MAY BE ACCOMPLISHED BY TEMPORARY SEDIMENTATION BASINS OR OTHER APPROPRIATE BMPS.

OTHER NOTES:

1. LONG TERM MAINTENANCE OF THE SITE WILL BE PERFORMED BY THE OWNER, EPISCOPAL HOMES. INCLUDED MAINTENANCE FOR STORMWATER DEVISES SHALL BE:
   1.1. INSPECT SUMP CATCH BASINS ON A BIANNUAL BASIS, ONCE IN THE SPRING AND ONCE IN THE FALL
   1.2. CLEAN SUMP CATCH BASINS OF SEDIMENT AND DEBRIS ANNUALLY OR WHEN SEDIMENTS FILL 1/3 OF THE STORAGE VOLUME.
   1.3. INSPECT STORM FILTER PER MANUFACTURER'S RECOMENDATIONS.
2. THIS SWPPP DOCUMENT HAS BEEN PREPARED BY BKBM ENGINEERS. A COPY OF THEIR EROSION AND SEDIMENT CONTROL PROGRAM CERTIFICATION IS AVAILABLE UPON REQUEST.
3. THIS SWPPP DOCUMENT MUST BE AMENDED AS NECESSARY DURING CONSTRUCTION IN ORDER TO KEEP IT CURRENT WITH THE POLLUTANT CONTROL MEASURES UTILIZED AS THE SITE. THE SITE MAP SHOWING LOCATIONS OF ALL STORM WATER CONTROLS MUST BE POSTED ON THE SITE AND UPDATED TO REFLECT THE PROGRESS OF CONSTRUCTION.

CUNINGHAM GROUP

Cuningham Group Architecture, Inc.

St. Anthony Main
201 Main St. SE
Suite 325
Minneapolis, MN 55414

Tel: 612 379 3400
Fax: 612 379 4400

www.cuningham.com

Consultant

BKBM

5930 Brooklyn Boulevard
Minneapolis, MN 55429-2518
Phone: (763) 843-0420
Fax: (763) 843-0421
www.bkbm.com

© 2010 BKBM Professional Engineers, Inc.
The contents of this document are the instruments of service and is the property of BKBM Professional Engineers, Inc. and may not be used without written consent.

BKBM Job No. 14216.00

Revisions

No.	Date	Description

I hereby certify that this plan, specification or report was prepared by me or under my direct supervision and that I am a duly Licensed Professional Engineer under the laws of the state of Minnesota.

KEITH A. MATTE

Date	Lic. No.
XX/XX/20XX	46674

PDR RE-SUBMITTAL 12/11/2015

Document Phase:	PDR RE-SUBMITTAL
Date:	DECEMBER 11, 2015
PIC / AIC:	
Drawn By:	SJH
Checked By:	KAM
Comm. No.:	

Project Title

EPISCOPAL COMMONS

Sheet Title

Stormwater Pollution Prevention Plan

Sheet Number

C600

Copyright © 2015 by Cuningham Group Architecture, Inc. (All Rights Reserved)

Level 1 - Setback Dimension Plan
1/8" = 1'-0"

CUNINGHAM GROUP

Cuningham Group Architecture, Inc.

St. Anthony Main
201 Main St. SE
Suite 320
Minneapolis, MN 55414

Tel: 612 379 3400
Fax: 612 379 4400

www.cuningham.com

Consultant

TROSSEN WRIGHT PLUTOWSKI ARCHITECTS, PA

4125 Lakeland Ave. N.
Suite 200
Minneapolis, MN 55422

Phone: (763) 533-7171
Fax: (763) 533-7979

Revisions

No.	Date	Description

PDR / LAND USE APPLICATION SUBMITTAL

Document Phase

Date:	12/11/2015
PIC / AIC:	/Schoenack
Drawn By:	Author
Checked By:	Checker
Comm. No.:	11-1574

Project Title

EPISCOPAL COMMONS

Sheet Title

EXHIBIT A - SETBACK DIMENSION PLAN

Sheet Number

XA

Copyright © 2014 by Cuningham Group Architecture, Inc. [All Rights Reserved]

Site Planting Schedule					
	Common Name	Botanical Name	Installed Size	Quantity	Description
Coniferous Shrub					
TC	Japanese Upright Yew	Taxus cuspidata 'Capitata'	#5 CONT	59	
Deciduous Shrub					
Ba	Admiration Barberry	Berberis thunbergii 'Admiration'	#2 CONT	3	
CA	Variegated Dogwood	Cornus alba 'Bailhalo'	#5 CONT	69	
HY	Annabelle Hydrangea	Hydrangea arborescens 'Annabelle'	#5 CONT	43	
SP	Spirea	Spiraea x bumalda 'Goldflame'	#1 CONT	100	
Groundcover Shrub					
CO	Cranberry	Cotoneaster apiculatus	#5 CONT	54	
Perennial					
Hg	Guacamole Hosta	Hosta 'Guacamole'	#1 CONT	2	
HO	Hosta Aurea marginata	Hosta 'Aurea marginata'	#1 CONT	94	
Hs	Daylily - Sunday Gloves	Hemerocallis 'Sunday gloves'		141	
SE	Purple Emperor Stonecrop	Sedum 'Purple Emperor'	#1 CONT	19	
Tree					
AC	Red Maple	Acer rubrum	#10 CONT	1	
Af	Maple - Autumn Blaze	Acer x freemanii 'Jeffersred'	#25 CONT	2	
AG	Serviceberry	Amelanchier grandiflora 'Autumn Brilliance'	1 1/2 BB	8	Multi-trunk tree form
Sr	Japanese Tree Lilac	Syringa reticulata	2 BB	6	
Tc	Greenspire Linden	Tilia cordata 'Greenspire'	1 1/2 BB	3	
Vine					
Ca	Clematis - Arabella	Clematis 'Arabella'	#1 CONT	12	
PA	Boston Ivy	Parthenocissus tricuspidata	#1 CONT	5	
				621	

Courtyard Planting Schedule					
Type Mark	Common Name	Botanical Name	Installed Size	Quantity	Description
Coniferous Shrub					
JU	Emerald Arborvitae	Juniperus virginiana 'Grey Owl'	#5 CONT	7	
TA	Taunton Yew	Taxus x media 'Taunton'	#5 CONT	25	
Deciduous Shrub					
AR	Iroquois Beauty Chokeberry	Aronia melanocarpa 'Morton'	#5 CONT	23	
Ba	Admiration Barberry	Berberis thunbergii 'Admiration'	#2 CONT	27	
HY	Annabelle Hydrangea	Hydrangea arborescens 'Annabelle'	#5 CONT	8	
Perennial					
Ad	Astilbe - Deutschland	Astilbe japonica 'Deutschland'	#1 CONT	10	
Hg	Guacamole Hosta	Hosta 'Guacamole'	#1 CONT	30	
HO	Hosta Aurea marginata	Hosta 'Aurea marginata'	#1 CONT	22	
Grand total				152	

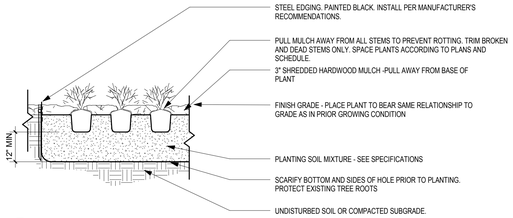

4 / L100 **Planting Bed Detail**
1" = 1'-0"

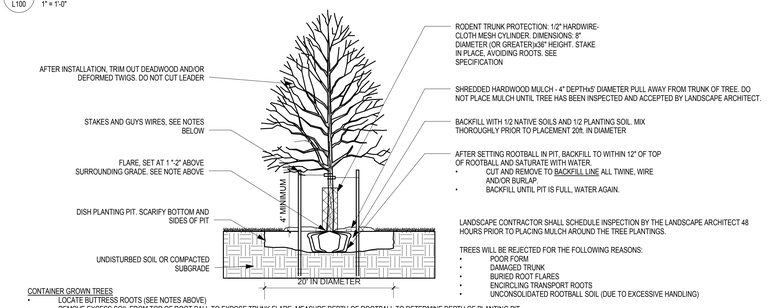

NOTES:
- PRIOR TO DELIVERY TO THE SITE, THE CONTRACTOR SHALL LOCATE THE BUTTRESS ROOTS OR TRUNK FLARE OF EACH TREE. IF FLARE IS LOCATED MORE THAN 2" DOWN FOR THE TOP OF THE ROOTBALL, THE TREE IS REJECTED AND SHALL NOT BE DELIVERED TO THE SITE.
- ONCE THE PROPERLY GROWN TREE IS DELIVERED TO THE SITE, MEASURE THE DISTANCE BETWEEN TOP OF THE BUTTRESS ROOTS AND THE BOTTOM OF THE ROOTBALL. SUBTRACT 2". SUBTRACT 2" TO DETERMINE DEPTH OF PLANTING PIT.
- DIG PIT TO DEPTH DETERMINED ABOVE. PIT SHALL BE DISHED WITH SIDEWALLS AS SHOWN BELOW. SCARIFY WALLS AND BOTTOM OF PIT.
- SET TREE IN PIT SO THAT THE FLARE IS ONE-TWO INCHES ABOVE SURROUNDING GRADE. IN ALL AREAS WITH HEAVY CLAY OR POORLY DRAINED SOILS (MOTTLING), CONTACT LANDSCAPE ARCHITECT. TREE MAY BE RELOCATED OR THE ROOTBALL FURTHER ELEVATED.
- REMOVE ANY SOIL FROM TOP OF ROOTBALL TO EXPOSE TOP FLARE. THE LANDSCAPE ARCHITECT WILL NOT ACCEPT ANY TREE UNLESS THE FLARE IS VISIBLE.
- BACKFILL PLANTING PIT TO WITHIN 12" OF GRADE AND THOROUGHLY WATER.
- REMOVE BURLAP, WIRE, AND ALL ROPE FROM THE TOP 12" OF THE ROOT BALL.
- BACKFILL TO THE TOP OF THE ROOTBALL
- DO NOT CREATE WATERING RING
- CONTACT LANDSCAPE ARCHITECT TO INSPECT PLANTING PRIOR TO PLACING ANY MULCH OVER THE ROOTBALL.

STAKING:
GUY ASSEMBLY: 16" POLYPROPYLENE OR POLYETHYLENE (40 MIL) 1 1/2" WIDE STRIP (TYP) DOUBLE STRAND 14 GA WIRE AND 3 STEEL STAKES OR SIGN POSTS AT 120 DEGREES O.C.(SEE STAKING DIAGRAM)

GUY ASSEMBLY MANDATORY ONLY FOR THOSE TREES WITH 4" CALIPER OR GREATER AND ALL BARE ROOT TREES. CONTRACTOR SHALL MAINTAIN TREE IN A PLUMB POSITION FOR THE DURATION OF THE GUARANTEE PERIOD.

COORDINATE STAKING TO INSURE UNIFORM ORIENTATION OF GUY LINES AND STAKES.

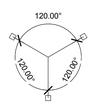

3 / L100 **Tree Planting Detail**
1/4" = 1'-0"

Site Plan Review Metrics

Total Property Area	= 45,000 sf
Total Building Area	= 26,684 sf
Total Site Area (Property - Bldg.)	=18,316 sf
Total Landscaping Area	= 7,267 sf
Total Impervious Surface	= 37,733 sf
20% Landscaping Required	= 3,663 sf
Total Courtyard Area	= 7,278 sf
Trees Required	= 15
Shrubs Required	= 72
Trees Provided	= 9 on site, 11 in blvd.
Shrubs Provided	= 625
Bike Parking Required	= 32 spaces
Bike Parking Provided	= 33 (3 on site, 30 permanent)

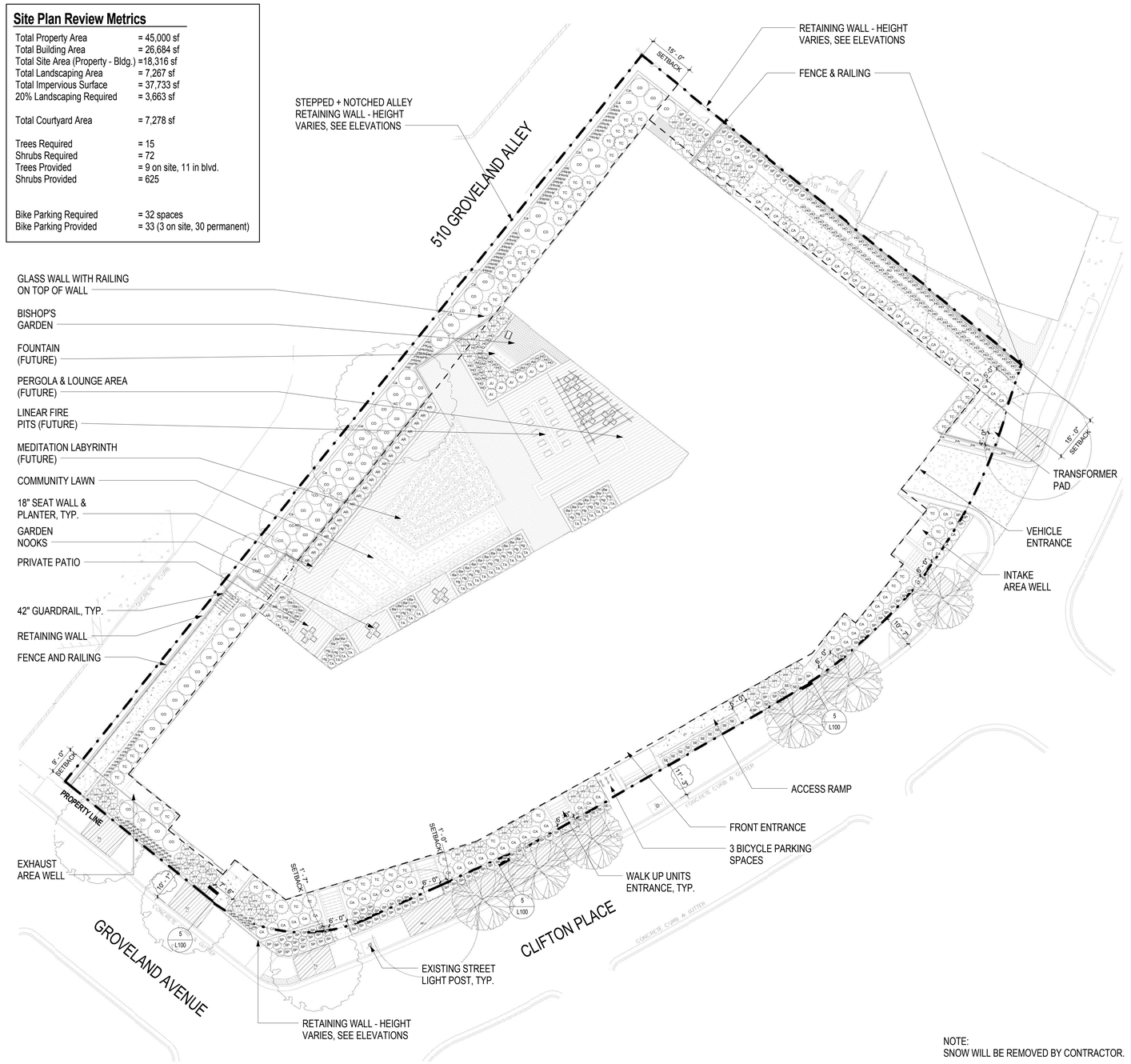

NOTE:
SNOW WILL BE REMOVED BY CONTRACTOR.

1 / L100 **Site**
1/16" = 1'-0"

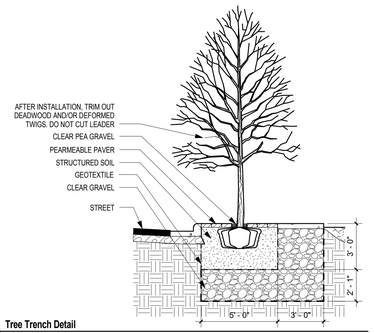

5 / L100 **Tree Trench Detail**
1/4" = 1'-0"

CUNINGHAM GROUP

Cuningham Group Architecture, Inc.
St. Anthony Main
201 Main St. SE
Suite 325
Minneapolis, MN 55414
Tel: 612 379 3400
Fax: 612 379 4400
www.cuningham.com

Consultant
TROSSEN WRIGHT PLUTOWSKI ARCHITECTS, PA
4125 Lakeland Ave. N.
Suite 200
Minneapolis, MN 55422
Phone: (763) 533-7171
Fax: (763) 533-7979

Revisions

No.	Date	Description
1	12/11/15	PDR Revision

PDR / LAND USE APLICATION SUBMITTAL

Document Phase:	
Date:	12/11/2015
PIC / AIC:	JShoeneck
Drawn By:	JH
Checked By:	DM
Comm. No.:	11-1174

Project Title
EPISCOPAL COMMONS

Sheet Title
Landscape Plan

Sheet Number
L100

Copyright © 2013 by Cuningham Group Architecture, Inc. (All Rights Reserved)

12/10/2015 10:45:55 AM C:\Revit Local\11-1174 T730 Clifton Site_jsmustake@cuningham.com.rvt

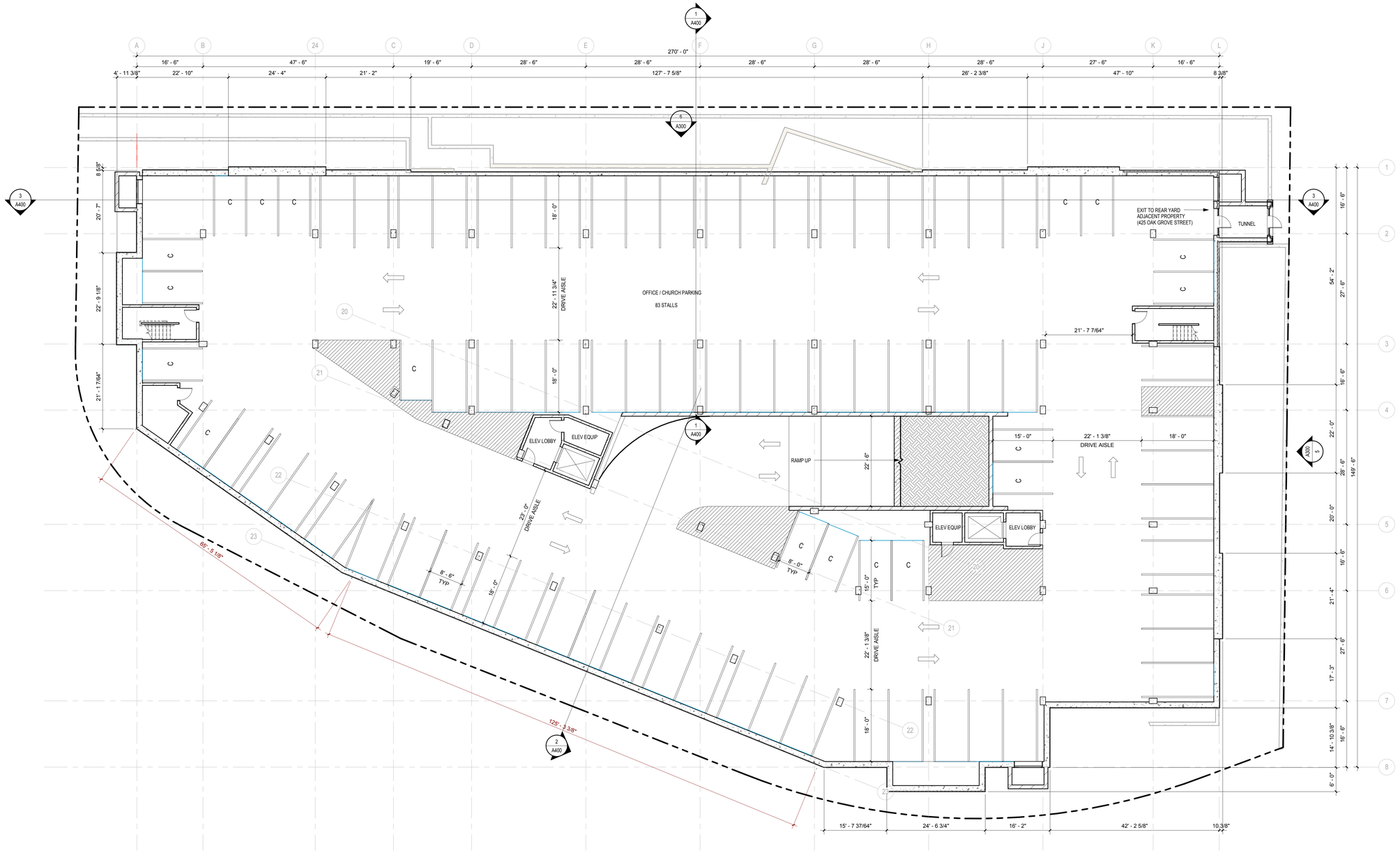

1 A100 **Level S2**
3/32" = 1'-0"

CUNINGHAM GROUP

Cuningham Group Architecture, Inc.

St. Anthony Main
201 Main St. SE
Suite 325
Minneapolis, MN
55414

Tel: 612 379 3400
Fax: 612 379 4400

www.cuningham.com

Consultant

TROSSEN WRIGHT PLUTOWSKI ARCHITECTS, PA

4125 Lakeland Ave. N.
Suite 200
Minneapolis, MN 55422

Phone: (763) 533-7171
Fax: (763) 533-7979

Revisions

No.	Date	Description

PDR / LAND USE APPLICATION SUBMITTAL

Document Phase:	
Date:	12/11/2015
PIC / AIC:	JSchoeneck
Drawn By:	SRH
Checked By:	JAS
Comm. No.:	11-1174

Project Title

EPISCOPAL COMMONS

Sheet Title

Subgrade Level S2 Floor Plan

Sheet Number

A100

Copyright © 2014 by Cuningham Group Architecture, Inc. (All Rights Reserved)

12/30/2015 11:01:44 AM C:\Revit Local\11-1174_CWorPlace Central_jaeckelson.rvt

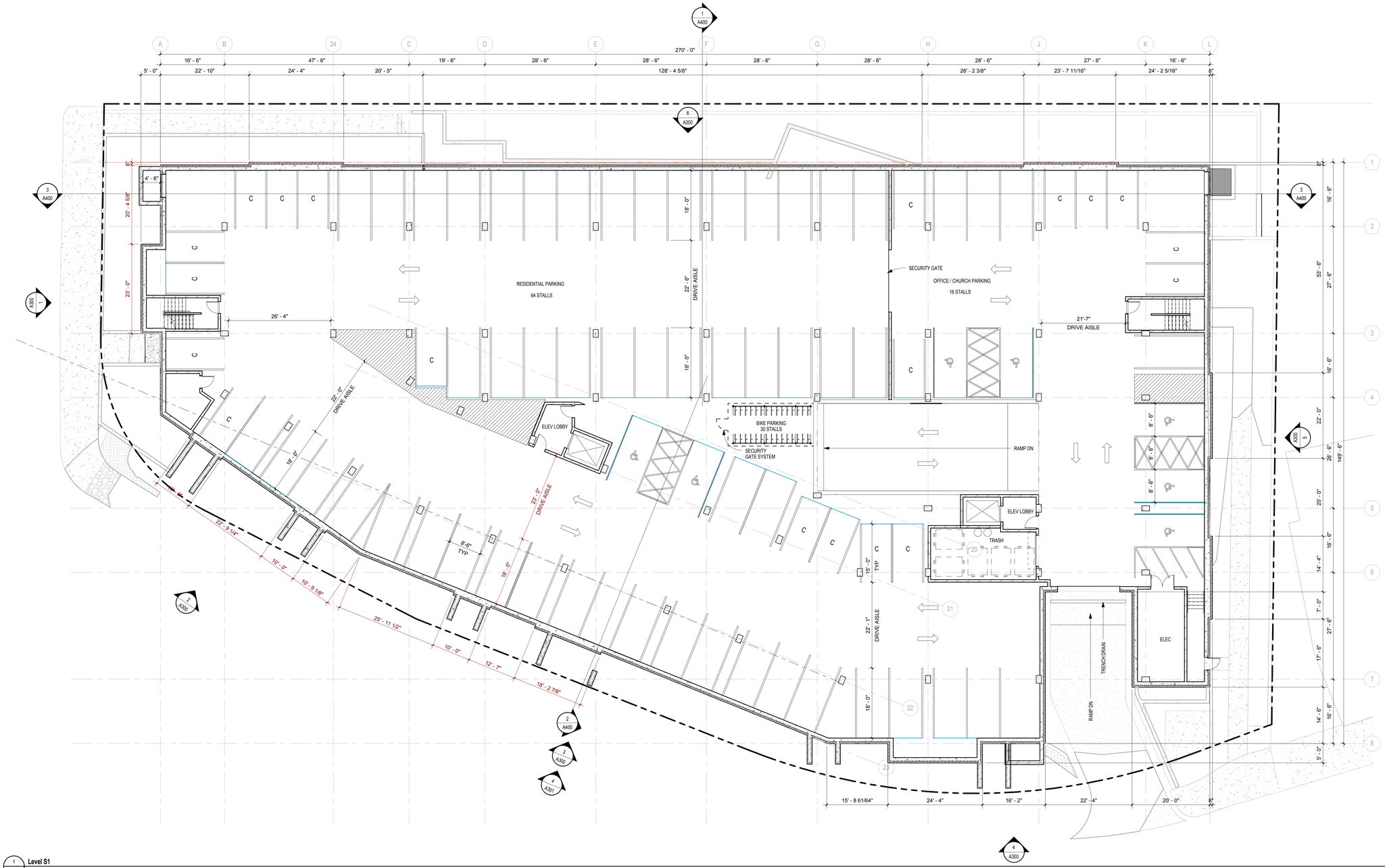

1 A101 **Level S1**
3/32" = 1'-0"

CUNINGHAM GROUP

Cuningham Group Architecture, Inc.

St. Anthony Main
201 Main St. SE
Suite 325
Minneapolis, MN
55414

Tel: 612 379 3400
Fax: 612 379 4400

www.cuningham.com

Consultant

TROSSEN WRIGHT PLUTOWSKI ARCHITECTS, PA

4125 Lakeland Ave. N.
Suite 200
Minneapolis, MN 55422

Phone: (763) 533-7171
Fax: (763) 533-7979

Revisions

No.	Date	Description

PDR / LAND USE APPLICATION SUBMITTAL

Document Phase:

Date:	12/11/2015
PIC / AIC:	JSchoeneck
Drawn By:	SRH
Checked By:	JAS
Comm. No.:	11-1174

Project Title

EPISCOPAL COMMONS

Sheet Title

Subgrade Level S1 Floor Plan

Sheet Number

A101

Copyright © 2014 by Cuningham Group Architecture, Inc. (All Rights Reserved)

12/30/2015 11:01:46 AM C:\Revit\Local\11-1174_OfficePlace-Central_sandersar.rvt

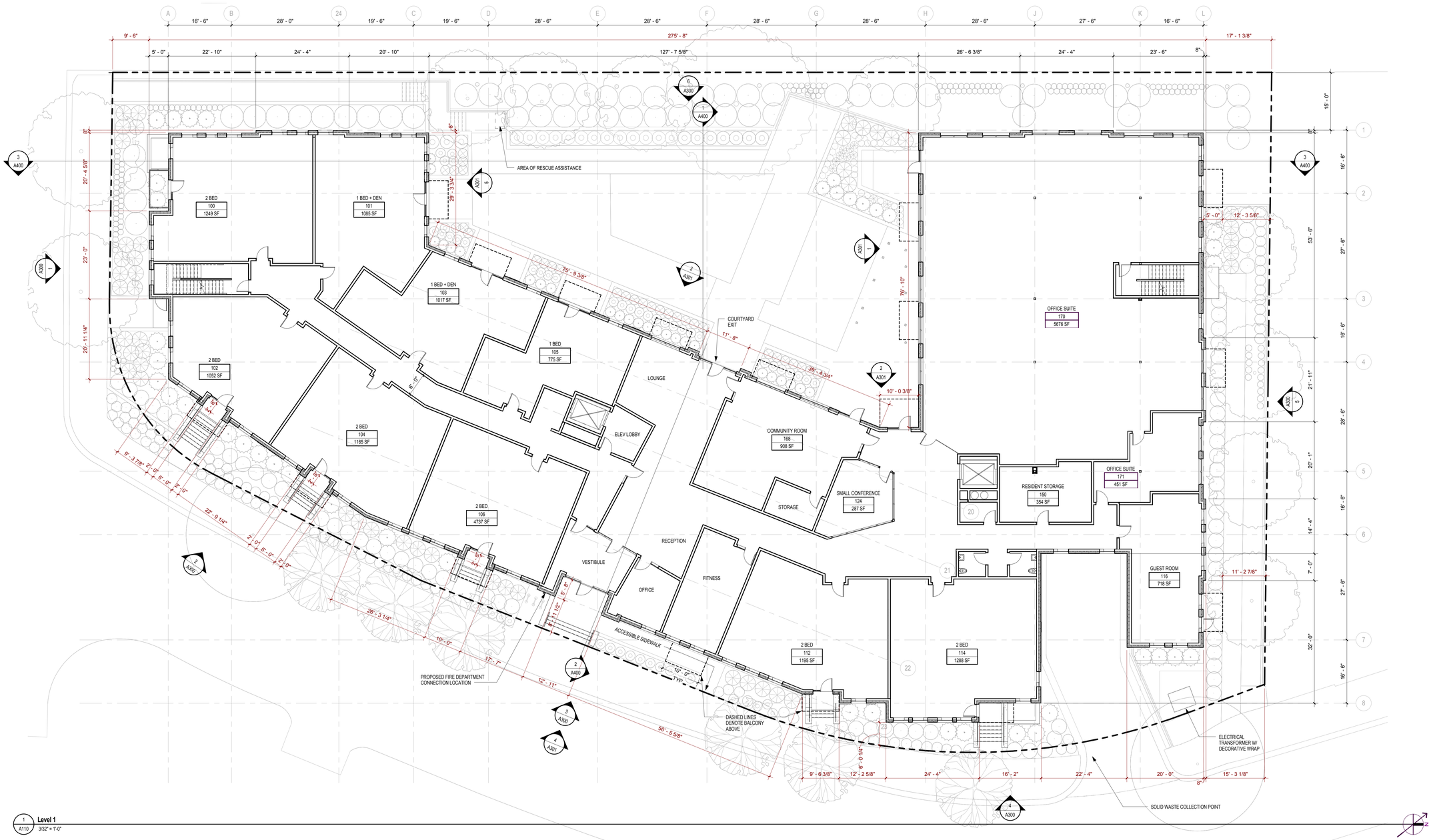

1 A110 **Level 1**
3/32" = 1'-0"

CUNINGHAM GROUP

Cuningham Group Architecture, Inc.

St. Anthony Main
201 Main St. SE
Suite 325
Minneapolis, MN
55414

Tel: 612 379 3400
Fax: 612 379 4400

www.cuningham.com

Consultant

TROSSEN WRIGHT PLUTOWSKI ARCHITECTS, PA

4125 Lakeland Ave. N.
Suite 200
Minneapolis, MN 55422

Phone: (763) 533-7171
Fax: (763) 533-7979

Revisions

No.	Date	Description

PDR / LAND USE APPLICATION SUBMITTAL

Document Phase:	
Date:	12/11/2015
PIC / AIC:	JSchoeneck
Drawn By:	SRH
Checked By:	JAS
Comm. No.:	11-1174

Project Title

EPISCOPAL COMMONS

Sheet Title

Level 1 Floor Plan

Sheet Number

A110

Copyright © 2014 by Cuningham Group Architecture, Inc. (All Rights Reserved)

12/30/2015 11:01:48 AM C:\Revit Local\11-1174_CWorPlace-Central_jaskinner.rvt

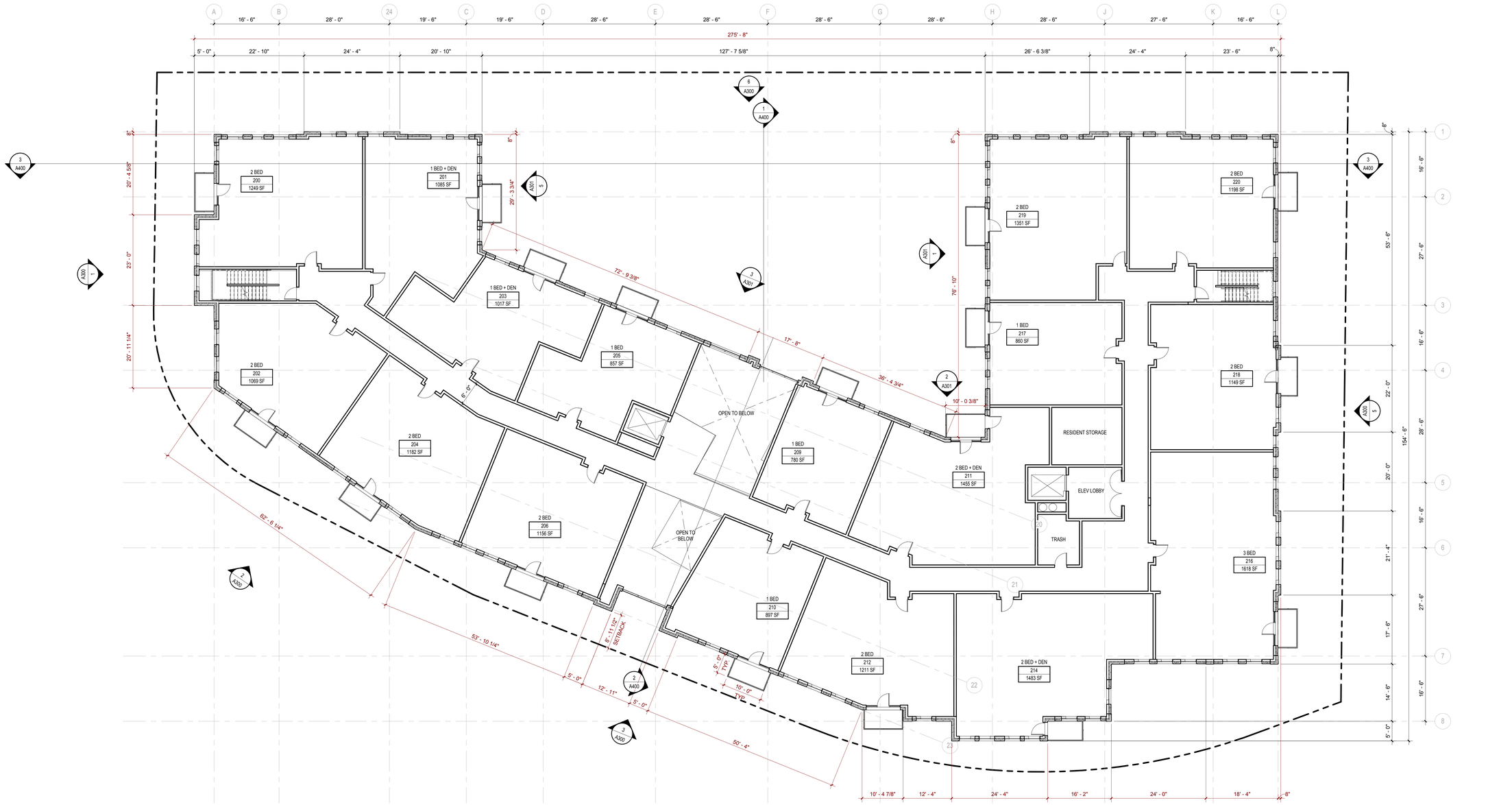

1 A120 **Level 2**
3/32" = 1'-0"

CUNINGHAM GROUP

Cuningham Group Architecture, Inc.

St. Anthony Main
201 Main St. SE
Suite 325
Minneapolis, MN
55414

Tel: 612 379 3400
Fax: 612 379 4400

www.cuningham.com

Consultant

TROSSEN WRIGHT PLUTOWSKI ARCHITECTS, PA

4125 Lakeland Ave. N.
Suite 200
Minneapolis, MN 55422

Phone: (763) 533-7171
Fax: (763) 533-7979

Revisions

No.	Date	Description

PDR / LAND USE APPLICATION SUBMITTAL

Document Phase:	
Date:	12/11/2015
PIC / AIC:	JSchoeneck
Drawn By:	SRH
Checked By:	JAS
Comm. No.:	11-1174

Project Title

EPISCOPAL COMMONS

Sheet Title

Level 2 Floor Plan

Sheet Number

A120

Copyright © 2014 by Cuningham Group Architecture, Inc. (All Rights Reserved)

12/10/2015 5:36:29 PM C:\Revit\Local\11-1174_CWbsPhase_Central_jsaboun.rvt

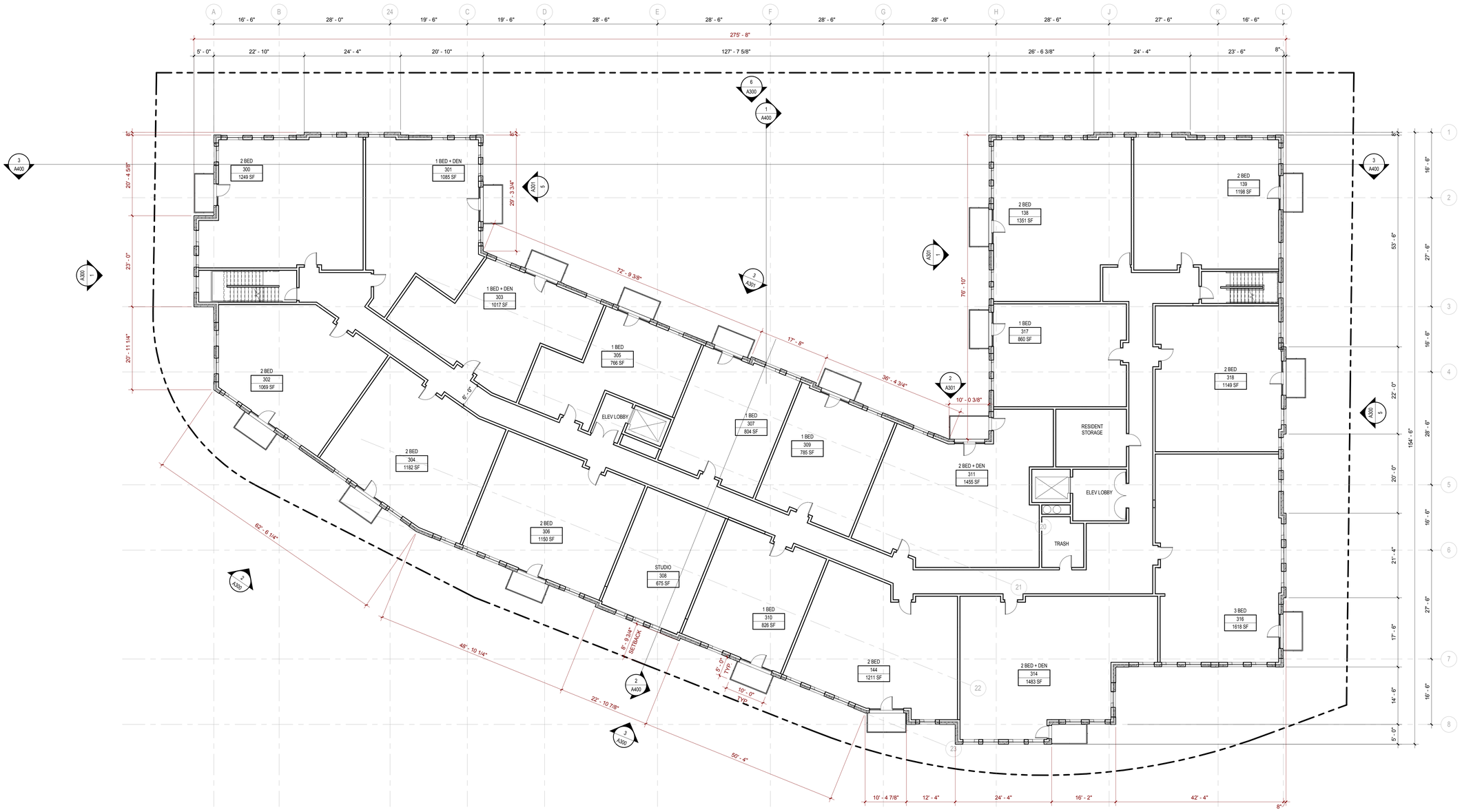

1 A130 **Level 3**
3/32" = 1'-0"

CUNINGHAM GROUP

Cuningham Group Architecture, Inc.

St. Anthony Main
201 Main St. SE
Suite 325
Minneapolis, MN
55414

Tel: 612 379 3400
Fax: 612 379 4400

www.cuningham.com

Consultant

TROSSEN WRIGHT PLUTOWSKI ARCHITECTS, PA

4125 Lakeland Ave. N.
Suite 200
Minneapolis, MN 55422

Phone: (763) 533-7171
Fax: (763) 533-7979

Revisions

No.	Date	Description

PDR / LAND USE APPLICATION SUBMITTAL

Document Phase:	
Date:	12/11/2015
PIC / AIC:	JSchoeneck
Drawn By:	SRH
Checked By:	JAS
Comm. No.:	11-1174

Project Title

EPISCOPAL COMMONS

Sheet Title

Level 3 Floor Plan

Sheet Number

A130

Copyright © 2014 by Cuningham Group Architecture, Inc. (All Rights Reserved)

C:\Revit\Local\11-1174_CitiesPlace-Central_jsaboni.rvt
12/10/2015 1:36:27 PM

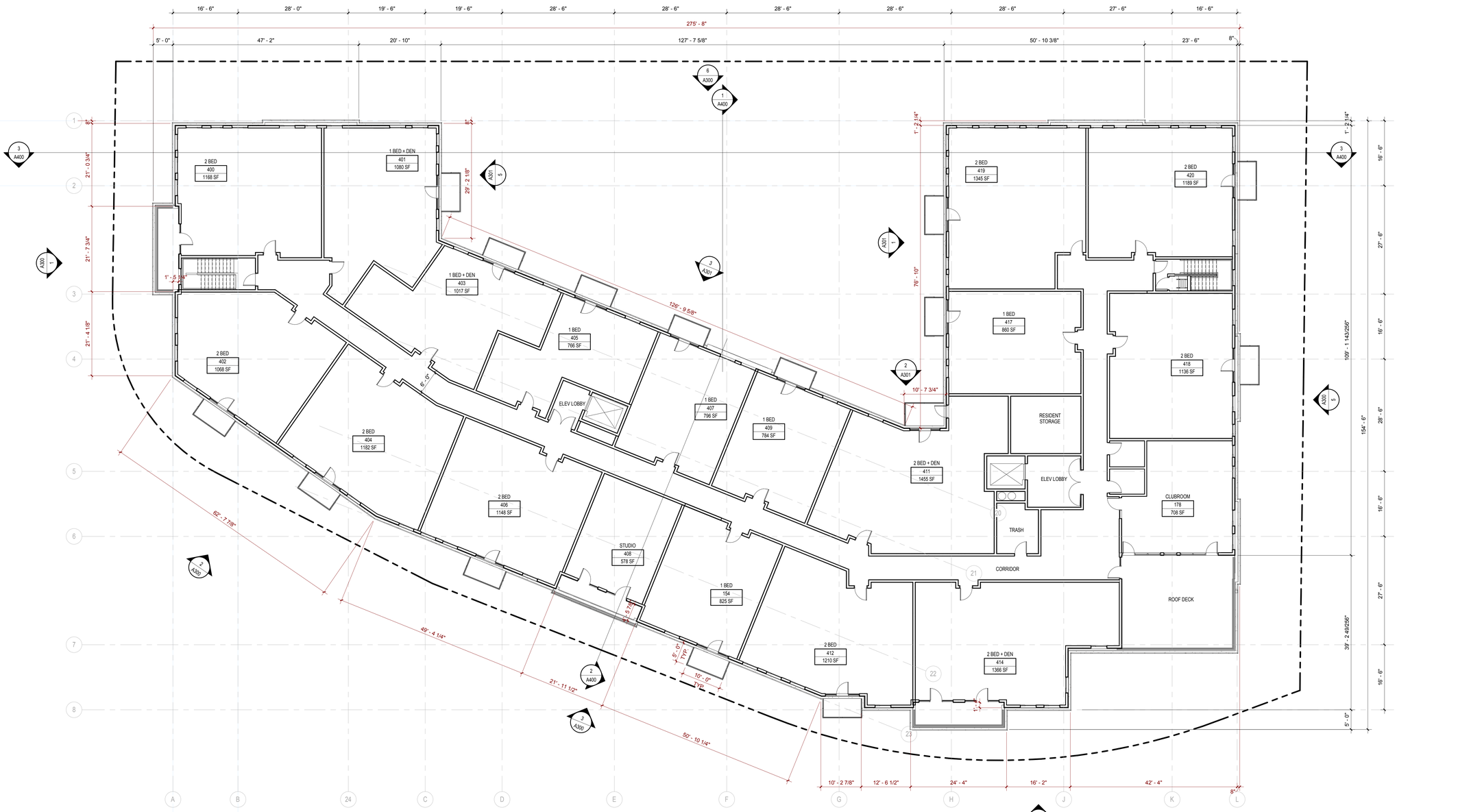

1 A140 **Level 4**
3/32" = 1'-0"

CUNINGHAM GROUP

Cuningham Group Architecture, Inc.

St. Anthony Main
201 Main St. SE
Suite 325
Minneapolis, MN
55414

Tel: 612 379 3400
Fax: 612 379 4400

www.cuningham.com

Consultant

TROSSEN WRIGHT PLUTOWSKI ARCHITECTS, PA

4125 Lakeland Ave. N.
Suite 200
Minneapolis, MN 55422

Phone: (763) 533-7171
Fax: (763) 533-7979

Revisions

No.	Date	Description

PDR / LAND USE APPLICATION SUBMITTAL

Document Phase:	
Date:	12/11/2015
PIC / AIC:	JSchoeneck
Drawn By:	SRH
Checked By:	JAS
Comm. No.:	11-1174

Project Title

EPISCOPAL COMMONS

Sheet Title

Level 4 Floor Plan

Sheet Number

A140

Copyright © 2014 by Cuningham Group Architecture, Inc. (All Rights Reserved)

12/10/2015 5:36:39 PM C:\Revits\Local\11-1174_CWorkPlace Overlay_jcabacar.rvt

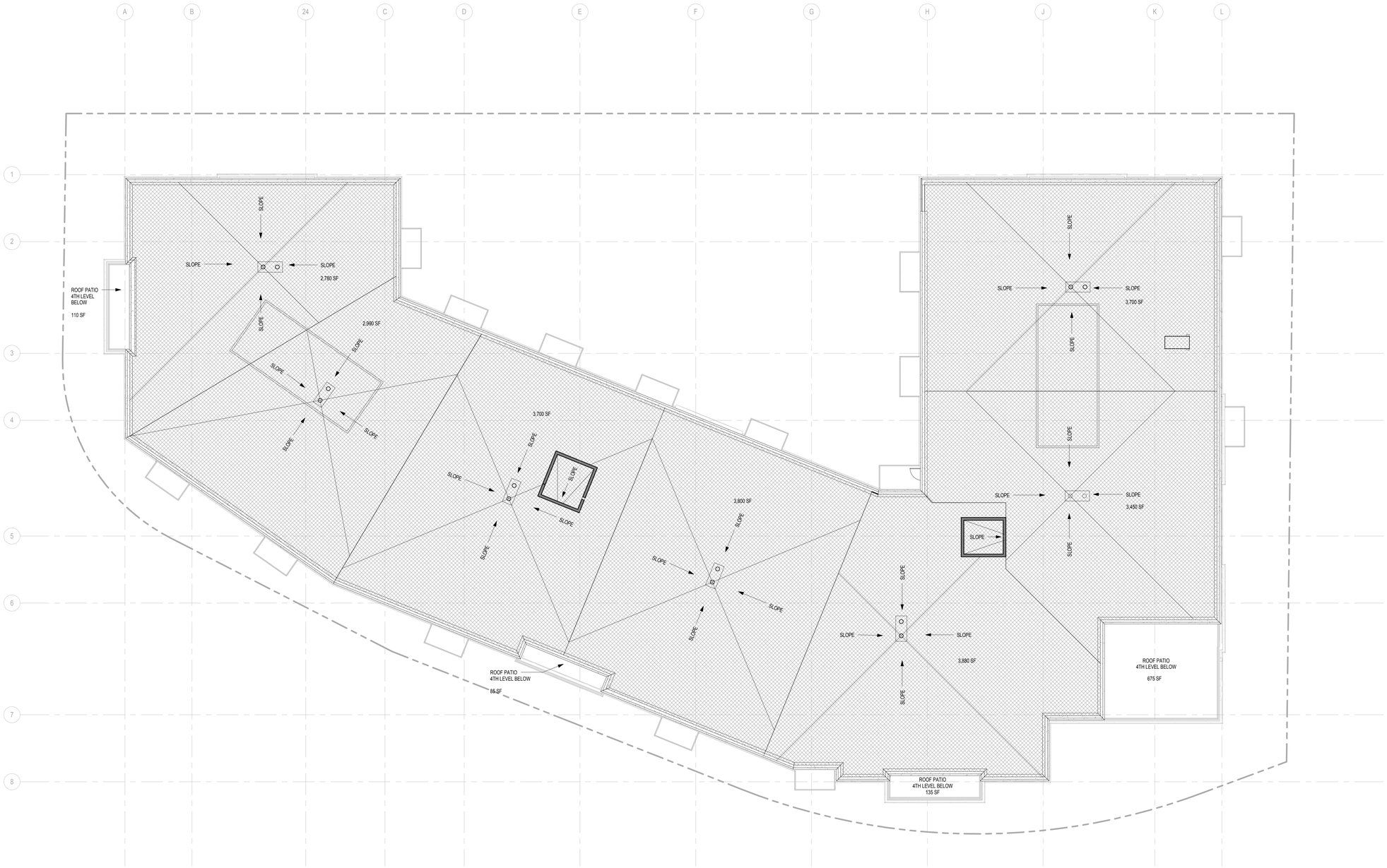

1 A200 **ROOF PLAN**
3/32" = 1'-0"

CUNINGHAM GROUP

Cuningham Group Architecture, Inc.

St. Anthony Main
201 Main St. SE
Suite 325
Minneapolis, MN
55414

Tel: 612 379 3400
Fax: 612 379 4400

www.cuningham.com

Consultant

TROSSEN WRIGHT PLUTOWSKI ARCHITECTS, PA

4125 Lakeland Ave. N.
Suite 200
Minneapolis, MN 55422

Phone: (763) 533-7171
Fax: (763) 533-7979

Revisions

No.	Date	Description

PDR / LAND USE APPLICATION SUBMITTAL

Document Phase:	
Date:	12/11/2015
PIC / AIC:	JSchoeneck
Drawn By:	Author
Checked By:	Checker
Comm. No.:	11-1174

Project Title

EPISCOPAL COMMONS

Sheet Title

Roof Plan

Sheet Number

A200

Copyright © 2014 by Cuningham Group Architecture, Inc. (All Rights Reserved)

C:\Revit\Local\11-1174_OfficePlace-Central_jsoboroff.rvt

12/11/2015 5:41:49 PM

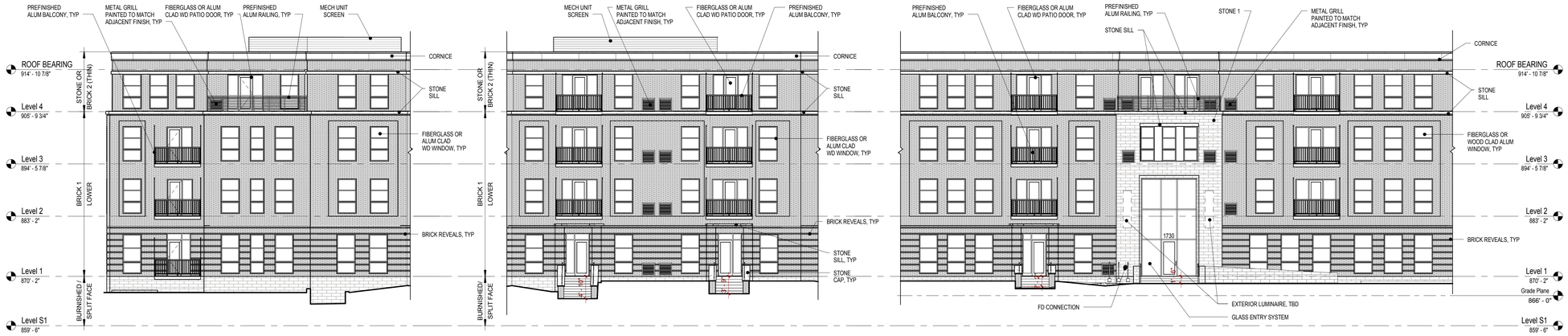

1 A300 **South Elevation**
3/32" = 1'-0"

2 A300 **East Elevation @ Walk Up Units**
3/32" = 1'-0"

3 A300 **East Elevation @ Building Entry**
3/32" = 1'-0"

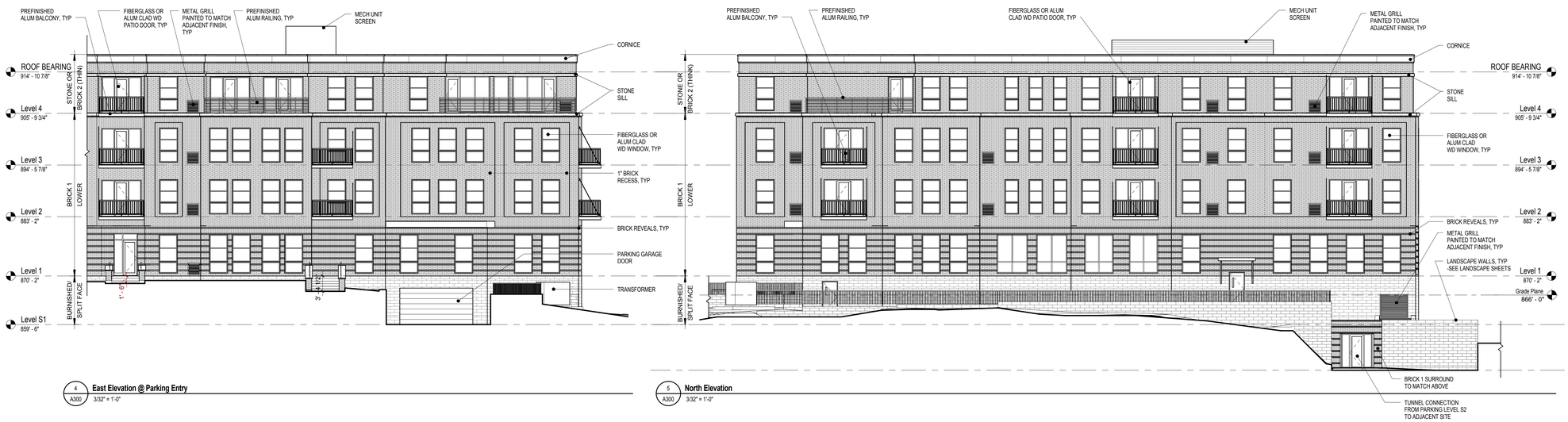

4 A300 **East Elevation @ Parking Entry**
3/32" = 1'-0"

5 A300 **North Elevation**
3/32" = 1'-0"

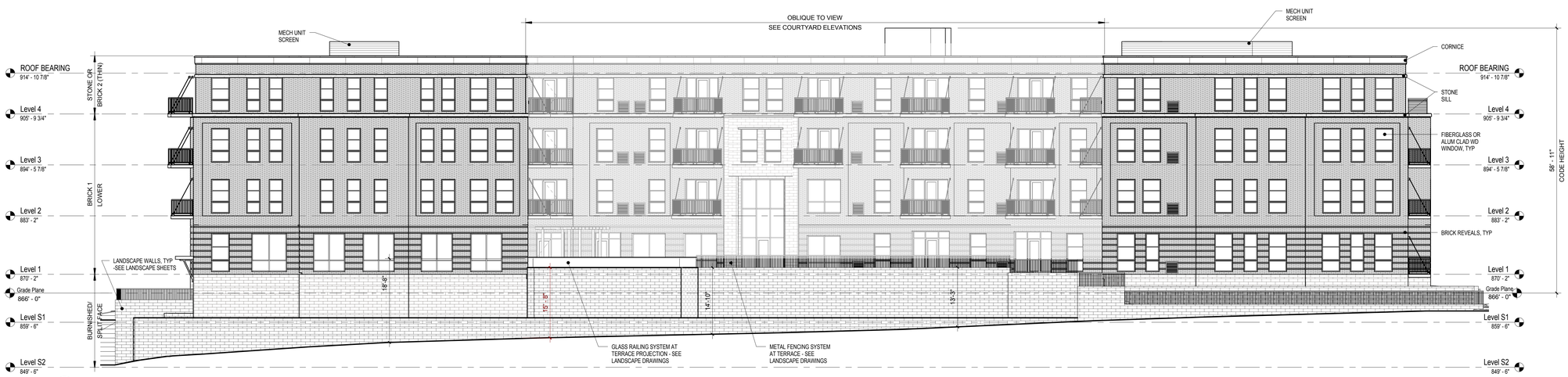

6 A300 **West Elevation @ Alley**
3/32" = 1'-0"

CUNINGHAM GROUP

Cuningham Group Architecture, Inc.

St. Anthony Main
201 Main St. SE
Suite 325
Minneapolis, MN
55414

Tel: 612 379 3400
Fax: 612 379 4400

www.cuningham.com

Consultant

TROSSEN WRIGHT PLUTOWSKI ARCHITECTS, PA

4125 Lakeland Ave. N.
Suite 200
Minneapolis, MN 55422

Phone: (763) 533-7171
Fax: (763) 533-7979

Revisions

No.	Date	Description

PDR / LAND USE APPLICATION SUBMITTAL

Document Phase:	
Date:	12/11/2015
PIC / AIC:	JSchoeneck
Drawn By:	JJ
Checked By:	JAS
Comm. No.:	11-1174

Project Title

EPISCOPAL COMMONS

Sheet Title

Exterior Elevations

Sheet Number

A300

Copyright © 2014 by Cuningham Group Architecture, Inc. (All Rights Reserved)

C:\Revit\Local\11-1174_OfficePlace-Central_jcelson.rvt
12/10/2015 1:38:52 PM

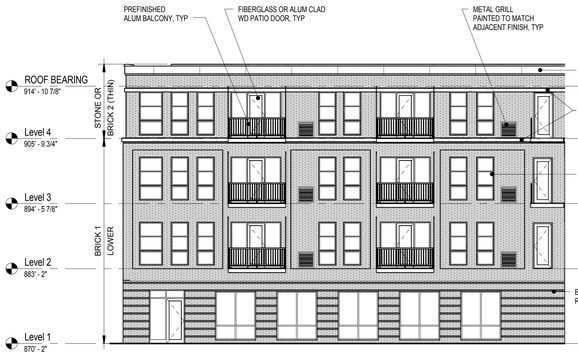

1 A301 **Elevation @ Courtyard Facing South**
3/32" = 1'-0"

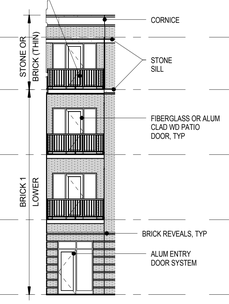

2 A301 **Elevation @ Courtyard Facing West 01**
3/32" = 1'-0"

3 A301 **Elevation @ Courtyard Facing West 02**
3/32" = 1'-0"

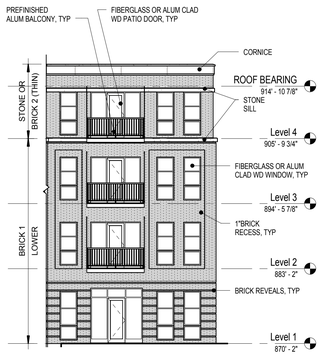

5 A301 **Elevation @ Courtyard Facing North**
3/32" = 1'-0"

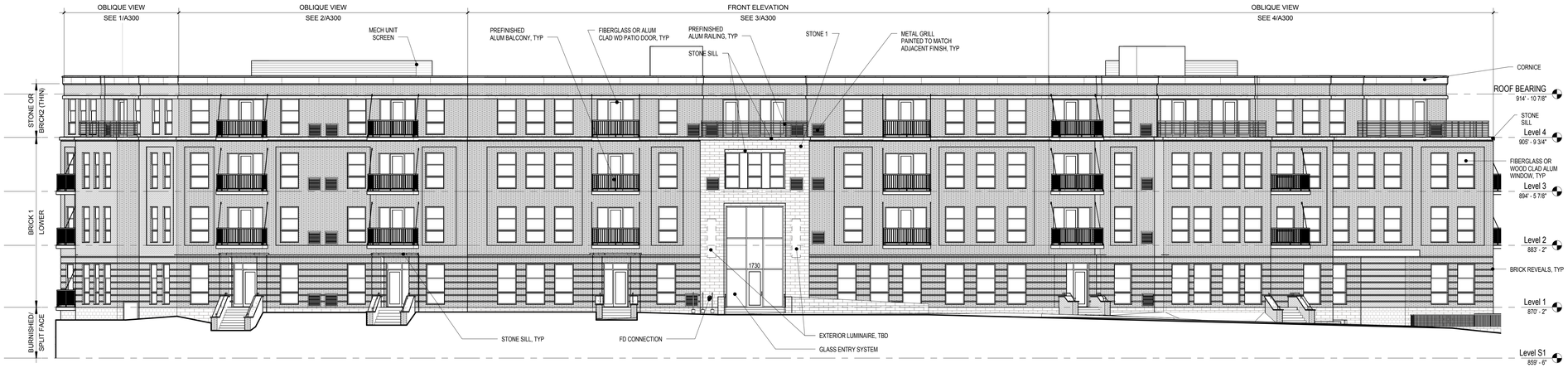

4 A301 **Elevation Along Clifton Place**
3/32" = 1'-0"

CUNINGHAM GROUP

Cuningham Group Architecture, Inc.

St. Anthony Main
201 Main St. SE
Suite 325
Minneapolis, MN
55414

Tel: 612 379 3400
Fax: 612 379 4400

www.cuningham.com

Consultant

TROSSEN WRIGHT PLUTOWSKI ARCHITECTS, PA

4125 Lakeland Ave. N.
Suite 200
Minneapolis, MN 55422

Phone: (763) 533-7171
Fax: (763) 533-7979

Revisions

No.	Date	Description

PDR / LAND USE APPLICATION SUBMITTAL

Document Phase:	
Date:	12/11/2015
PIC / AIC:	JSchoeneck
Drawn By:	JJ
Checked By:	JAS
Comm. No.:	11-1174

Project Title

EPISCOPAL COMMONS

Sheet Title

Exterior Elevations - Courtyard

Sheet Number

A301

Copyright © 2014 by Cuningham Group Architecture, Inc. (All Rights Reserved)

12/30/2015 11:01:59 AM

C:\Revit Local\11-1174_CWorPlace Central_admin.rvt

1 A302 **South Elevation**
3/32" = 1'-0"

2 A302 **East Elevation @ Walk Up Units**
3/32" = 1'-0"

3 A302 **East Elevation @ Building Entry**
3/32" = 1'-0"

4 A302 **East Elevation @ Parking Entry**
3/32" = 1'-0"

5 A302 **North Elevation**
3/32" = 1'-0"

6 A302 **West Elevation @ Alley**
3/32" = 1'-0"

CUNINGHAM GROUP

Cuningham Group Architecture, Inc.

St. Anthony Main
201 Main St. SE
Suite 325
Minneapolis, MN
55414

Tel: 612 379 3400
Fax: 612 379 4400

www.cuningham.com

Consultant

TROSSEN WRIGHT PLUTOWSKI ARCHITECTS, PA

4125 Lakeland Ave. N.
Suite 200
Minneapolis, MN 55422

Phone: (763) 533-7171
Fax: (763) 533-7979

Revisions

No.	Date	Description

PDR / LAND USE APPLICATION SUBMITTAL

Document Phase:	
Date:	12/11/2015
PIC / AIC:	JSchoeneck
Drawn By:	JJ
Checked By:	JAS
Comm. No.:	11-1174

Project Title

EPISCOPAL COMMONS

Sheet Title

Exterior Elevations - Color

Sheet Number

A302

Copyright © 2014 by Cuningham Group Architecture, Inc. (All Rights Reserved)

C:\Revit\Local\11-1174_CWorPlace-Central_jjackson.rvt
12/11/2015 1:37:55 PM

1 A303 **Elevation @ Courtyard Facing South**
3/32" = 1'-0"

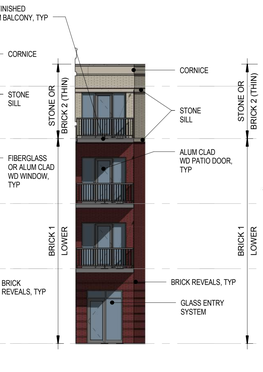

2 A303 **Elevation @ Courtyard Facing West 01**
3/32" = 1'-0"

3 A303 **Elevation @ Courtyard Facing West 02**
3/32" = 1'-0"

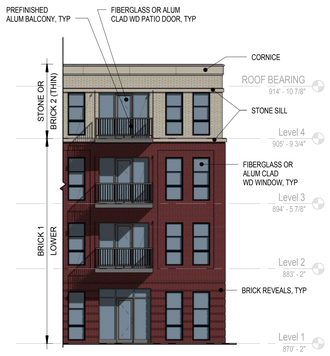

5 A303 **Elevation @ Courtyard Facing North**
3/32" = 1'-0"

CUNINGHAM GROUP

Cuningham Group Architecture, Inc.

St. Anthony Main
201 Main St. SE
Suite 325
Minneapolis, MN
55414

Tel: 612 379 3400
Fax: 612 379 4400

www.cuningham.com

Consultant

TROSSEN WRIGHT PLUTOWSKI ARCHITECTS, PA

4125 Lakeland Ave. N.
Suite 200
Minneapolis, MN 55422

Phone: (763) 533-7171
Fax: (763) 533-7979

Revisions

No.	Date	Description

PDR / LAND USE APPLICATION SUBMITTAL

Document Phase:	
Date:	12/11/2015
PIC / AIC:	JSchoeneck
Drawn By:	JJ
Checked By:	JAS
Comm. No.:	11-1174

Project Title

EPISCOPAL COMMONS

Sheet Title

Exterior Elevations - Courtyard - Color

Sheet Number

A303

Copyright © 2014 by Cuningham Group Architecture, Inc. (All Rights Reserved)

12/11/2015 1:39:06 PM C:\Revit_Local\11-1174_CitiesPlace-Central_jsilson.rvt

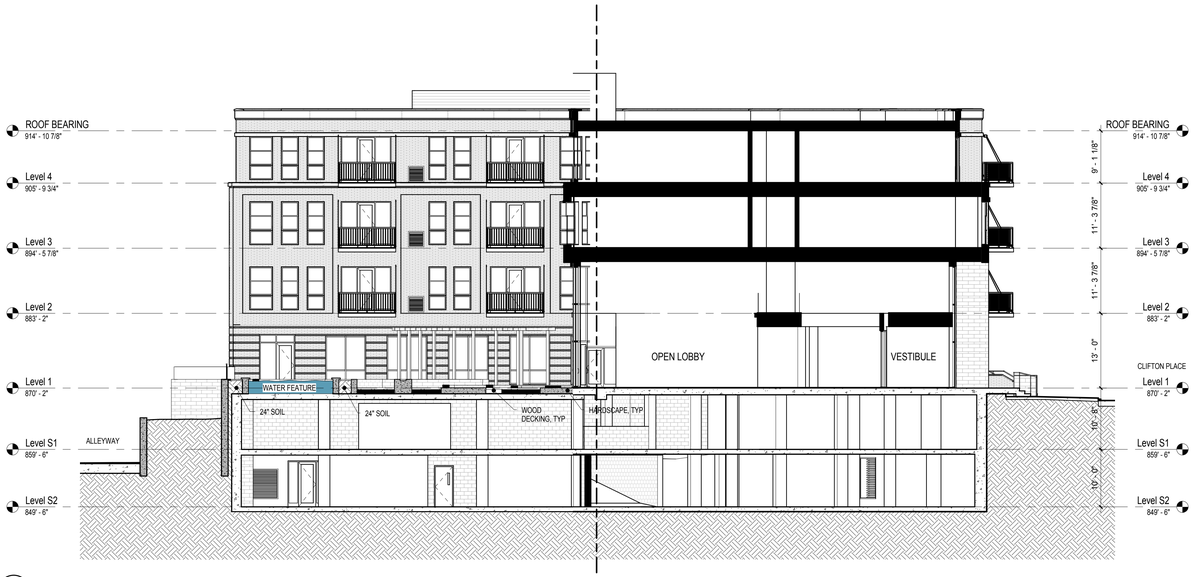

1 A400 **East-West Building Section**
3/32" = 1'-0"

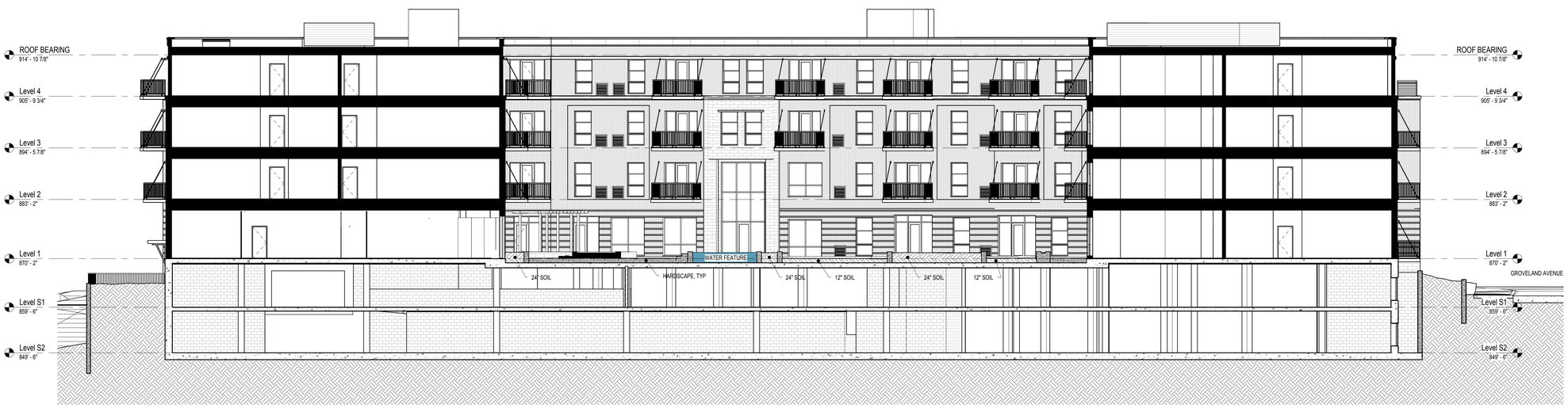

3 A400 **North-South Section**
3/32" = 1'-0"

CUNINGHAM GROUP

Cuningham Group Architecture, Inc.

St. Anthony Main
201 Main St. SE
Suite 325
Minneapolis, MN
55414

Tel: 612 379 3400
Fax: 612 379 4400

www.cuningham.com

Consultant

TROSSEN WRIGHT PLUTOWSKI ARCHITECTS, PA

4125 Lakeland Ave. N.
Suite 200
Minneapolis, MN 55422

Phone: (763) 533-7171
Fax: (763) 533-7979

Revisions

No.	Date	Description

PDR / LAND USE APPLICATION SUBMITTAL

Document Phase:	
Date:	12/11/2015
PIC / AIC:	JSchoeneck
Drawn By:	JJ
Checked By:	JAS
Comm. No.:	11-1174

Project Title

EPISCOPAL COMMONS

Sheet Title

Building Sections

Sheet Number

A400

Copyright © 2014 by Cuningham Group Architecture, Inc. (All Rights Reserved)

12/10/2015 1:40:09 PM
C:\Revit\cgai11-1174_CdRoofHouse-Central_jsobon.rvt

1 XA **Level 1 - Setback Dimension Plan**
3/32" = 1'-0"

CUNINGHAM GROUP

Cuningham Group Architecture, Inc.

St. Anthony Main
201 Main St. SE
Suite 325
Minneapolis, MN
55414

Tel: 612 379 3400
Fax: 612 379 4400

www.cuningham.com

Consultant

TROSSEN WRIGHT PLUTOWSKI ARCHITECTS, PA

4125 Lakeland Ave. N.
Suite 200
Minneapolis, MN 55422

Phone: (763) 533-7171
Fax: (763) 533-7979

Revisions

No.	Date	Description

PDR / LAND USE APPLICATION SUBMITTAL

Document Phase:	
Date:	12/11/2015
PIC / AIC:	JSchoeneck
Drawn By:	Author
Checked By:	Checker
Comm. No.:	11-1174

Project Title

EPISCOPAL COMMONS

Sheet Title

EXHIBIT A - SETBACK DIMENSION PLAN

Sheet Number

XA

Copyright © 2014 by Cuningham Group Architecture, Inc. (All Rights Reserved)

12/30/2015 11:02:08 AM C:\Revit\cash11-1174_CWorPlace-Central_aschoeneck.rvt

1730 Clifton Place - Shadow Study

Minneapolis | MN

December 11, 2015

CUNINGHAM GROUP

Shadow Study

	9:00 am	Noon	3:00 pm	6:00 pm
March21/ September 21 (Equinoxes)			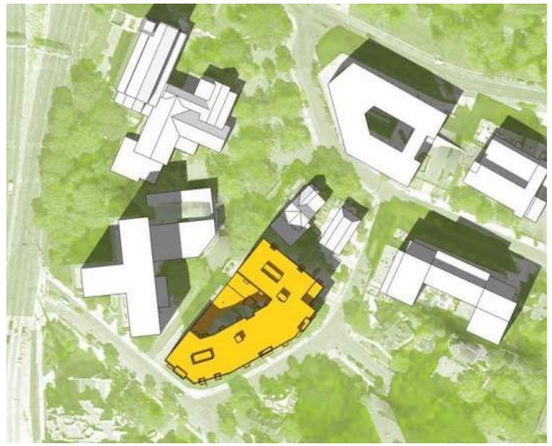	
June 21 (Summer Solstice)	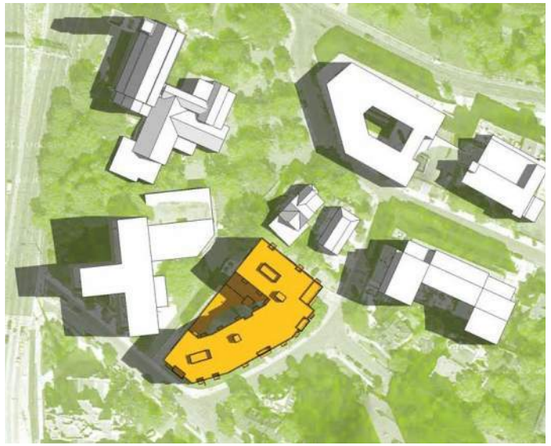			
December 21 (Winter Solstice)				

1730 Clifton Place - Renderings

Minneapolis | MN

December 11, 2015

CUNINGHAM GROUP

View from Groveland Avenue Looking North

View from Clifton Place Looking West

View from Groveland Avenue Looking South

View from Upper Floor of 510 Groveland Avenue

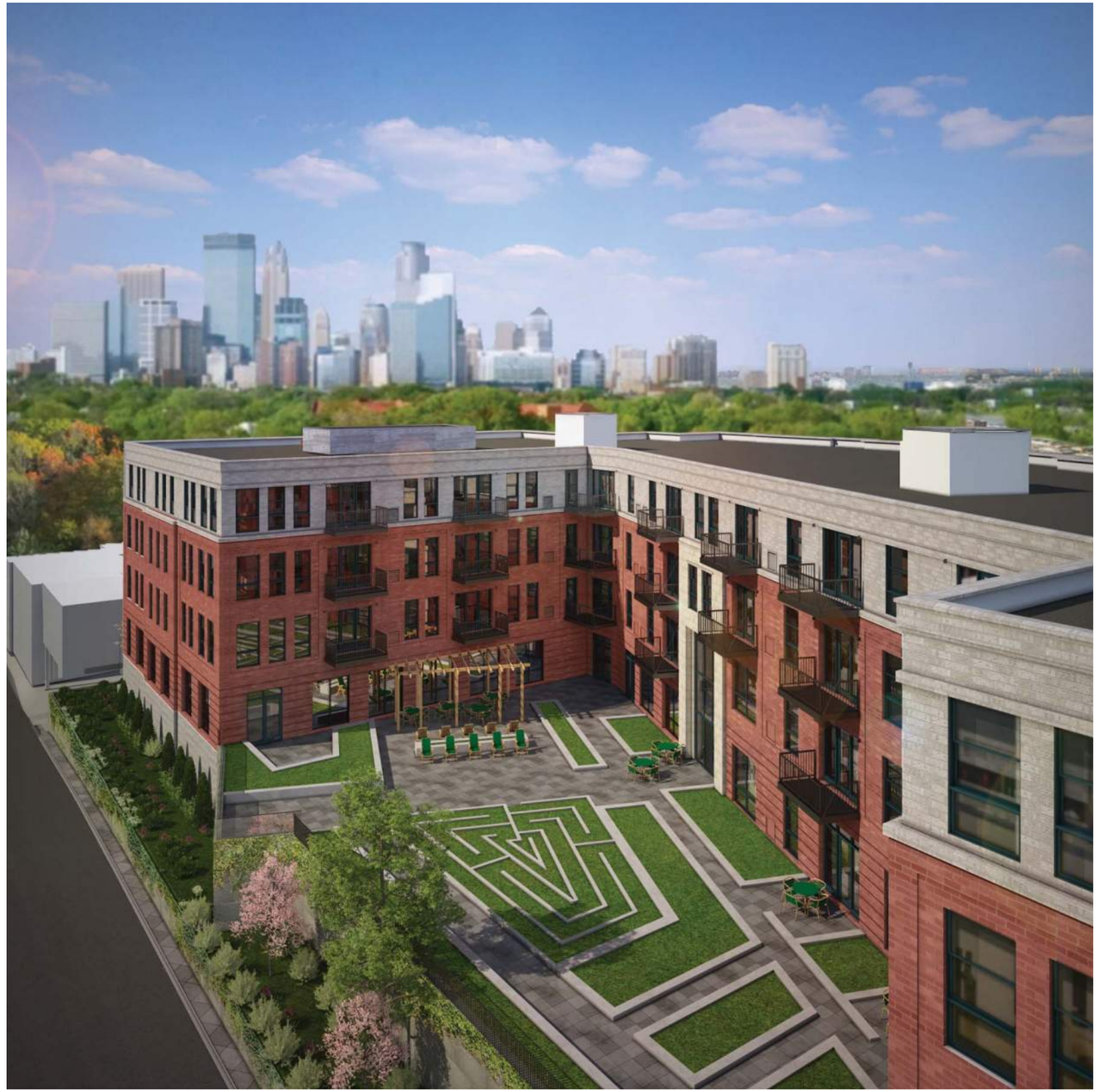

View from St. Mark's Parking Looking West Along Alley

CUNINGHAM GROUP

Episcopal Commons
1730 Clifton Place
Minneapolis, MN

Exterior Material Palette

BRICK 1
NORMAN BRICK
COLOR: SIOUX CITY BRICK "NAPA VALLEY"
2/3 CRANBERRY COLONIAL
1/3 PLUM COLONIAL

BRICK 2
NORMAN BRICK
COLOR: ACME BRICK (THIN BRICK)
LIMESTONE/RIDGEMAR

STONE 1
CAST STONE
COLOR: ARRISCRAFT
LIMESTONE (COOL GRAY)

WINDOW FRAMES
MARVIN CLAD ALUMINUM
OR PELLA FIBERGLASS
COLOR: GUNMETAL GREY

1730 Clifton Place - Site Photos

Minneapolis | MN

December 11, 2015

CUNINGHAM GROUP

Episcopal Church in Minnesota

Episcopal Church in Minnesota

1. View from parking lot at St. Mark's Episcopal Cathedral (Oak Grove Street)

2. View from Corner of Clifton Place and Oak Grove Street

3. View from Clifton Avenue

Office & Visitor
Parking
1730 Clifton Place

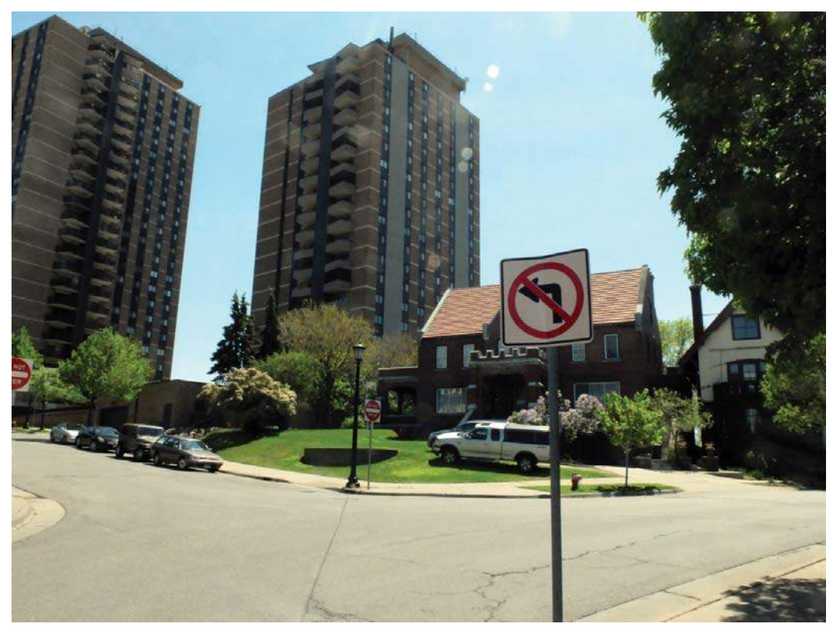

Views From Site | Across Alley, Toward St. Mark's Cathedral

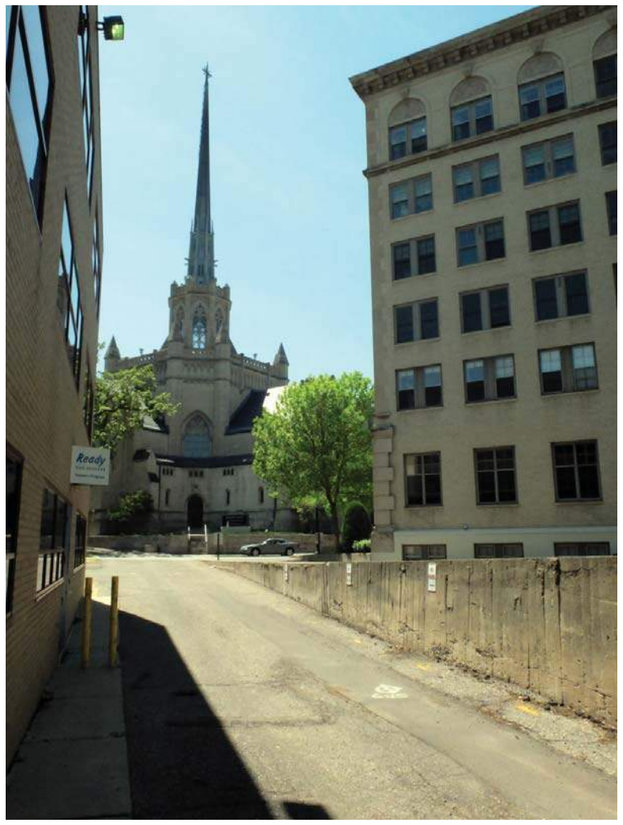

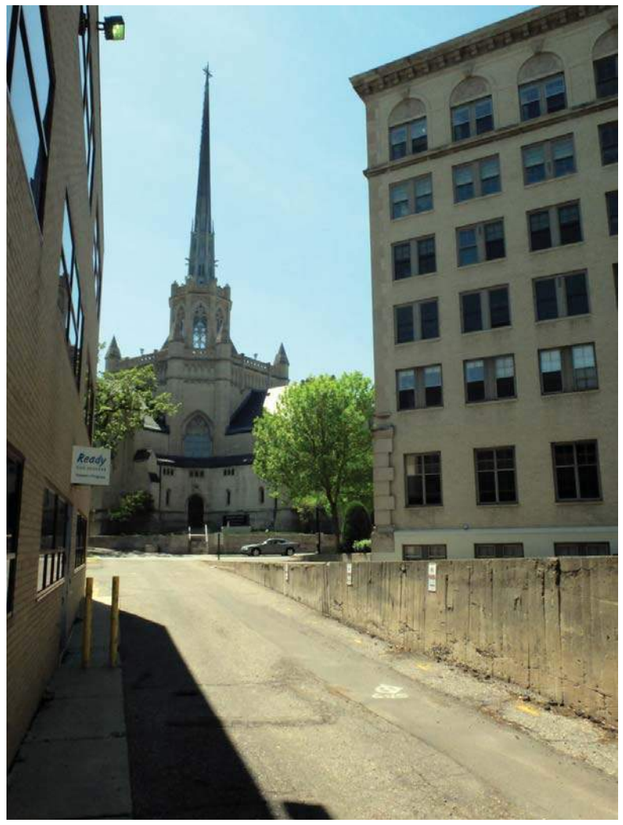

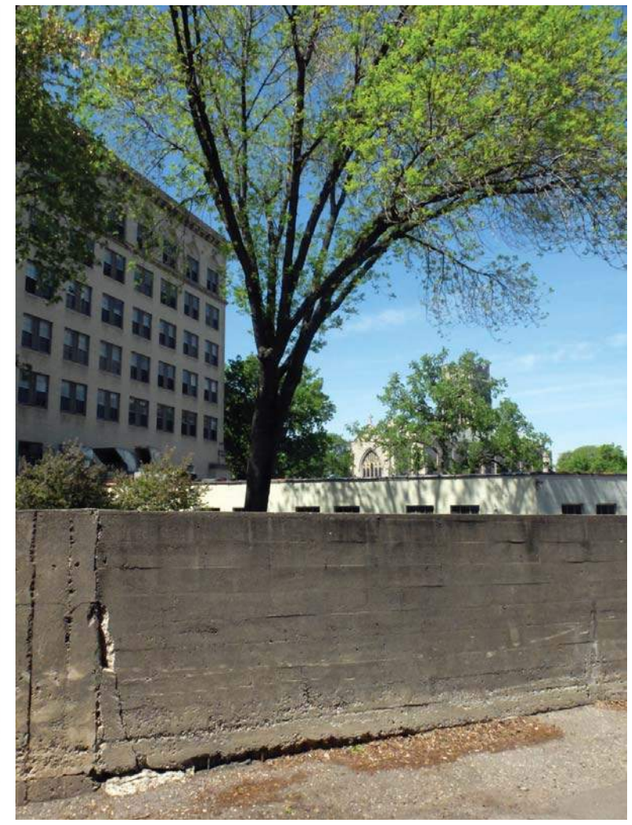

EPISCOPAL HOMES

A place to fully embrace life

December 2, 2015

Ms. Lisa Goodman
Council Member – Ward 7
350 S. 5th St., Room 307
Minneapolis, Minnesota 55415

Subject: **Development at 1730 Clifton Place, Land Use Application**

Dear Ms. Goodman:

It has been a pleasure to review our intentions for the proposed development located at 1730 Clifton Place in the Loring Park Neighborhood on a couple of occasions and we are pleased to inform you of our Land Use application which is being submitted on December 11, 2015 for Planning Commission consideration. Per a letter we sent to you last May 22, we had planned to submit our application at that time, but we withdrew the application before that submission to make some minor revisions to the project.

Episcopal Commons is a proposed four-story mixed-use development with the vision of partnering with Episcopal Church in Minnesota (ECMN) offices (approximately 6,300SF), St. Mark's Cathedral for parking, and approximately 65 units of market-rate rental housing for independent seniors developed and owned by Episcopal Homes. Parking (163 stalls) is provided in two sub-grade levels and is distributed between senior housing (60), office (12) and St. Marks (91). Amenities include exterior courtyard, upper level club space, first level community room, fitness area, and management office.

In an effort to accomplish the intent and tone noted in the Land Use Plan, we are respectfully requesting the following exceptions to current zoning:

- Front-yard variance along Clifton Place and Groveland
- Conditional Use Permit for height exceeding shoreline overlay district
- Variance within shoreline overlay district
- Variance for parking exceeding maximum
- Variance for exceeding maximum lot coverage (with below grade courtyard)

Sincerely,

Marvin J. Plakut, CEO
Episcopal Homes of MN
490 East Lynnhurst Ave.
St. Paul, Minnesota 55104
(651) 632-8851
mplakut@ehomesmn.org

EPISCOPAL HOMES

A place to fully embrace life

December 2, 2015

Ms. Jana Metge
Citizens for Loring Park Community
1645 Hennepin Ave., Suite 204
Minneapolis, Minnesota 55403

Subject: **Development at 1730 Clifton Place, Land Use Application**

Dear Ms. Metge:

It has been a pleasure to review our intentions for the proposed development located at 1730 Clifton Place in the Loring Park Neighborhood on a couple of occasions and we are pleased to inform you of our Land Use application which is being submitted on December 11, 2015 for Planning Commission consideration. Per a letter we sent to you last May 22, we had planned to submit our application at that time, but we withdrew the application before that submission to make some minor revisions to the project.

Episcopal Commons is a proposed four-story mixed-use development with the vision of partnering with Episcopal Church in Minnesota (ECMN) offices (approximately 6,300SF), St. Mark's Cathedral for parking, and approximately 65 units of market-rate rental housing for independent seniors developed and owned by Episcopal Homes. Parking (163 stalls) is provided in two sub-grade levels and is distributed between senior housing (60), office (12) and St. Marks (91). Amenities include exterior courtyard, upper level club space, first level community room, fitness area, and management office.

In an effort to accomplish the intent and tone noted in the Land Use Plan, we are respectfully requesting the following exceptions to current zoning:

- Front-yard variance along Clifton Place and Groveland
- Conditional Use Permit for height exceeding shoreline overlay district
- Variance within shoreline overlay district
- Variance for parking exceeding maximum
- Variance for exceeding maximum lot coverage (with below grade courtyard)

Sincerely,

Marvin J. Plakut, CEO
Episcopal Homes of MN
490 East Lynnhurst Ave.
St. Paul, Minnesota 55104
(651) 632-8851
mplakut@ehomesmn.org