CPED STAFF REPORT

Prepared for the City Planning Commission
CPC Agenda Item #2
August 15, 2016
BZZ-7816

LAND USE APPLICATION SUMMARY

Property Location: 2323 11th Avenue South

Project Name: Phillips Community Center Aquatics Facility

Prepared By: Hilary Dvorak, Principal Planner, (612) 673-2639

Applicant: Minneapolis Park and Recreation Board

Project Contact: Linda McCracken-Hunt, FAIA, JLG Architects Inc.

Request: For an approximately 9,500 square foot addition to the Phillips Community Center Aquatics Facility

Required Applications:

Site Plan Review	For an approximately 9,500 square foot addition to the Phillips Community Center Aquatics Facility

SITE DATA

Existing Zoning	R2B Two-family District
Lot Area	123,331 square feet / 2.83 acres
Ward(s)	6; adjacent to 9
Neighborhood(s)	Ventura Village; adjacent to Midtown Phillips
Designated Future Land Use	Park and Open Space
Land Use Features	Not applicable
Small Area Plan(s)	Not applicable

Date Application Deemed Complete	July 18, 2016	**Date Extension Letter Sent**	Not applicable
End of 60-Day Decision Period	September 16, 2016	**End of 120-Day Decision Period**	Not applicable

BACKGROUND

SITE DESCRIPTION AND PRESENT USE. The property is located on the north side of East 24th Street between 11th Avenue South and 13th Avenue South. The property is occupied by the Phillips Community Center.

SURROUNDING PROPERTIES AND NEIGHBORHOOD. The site is surrounded by residential developments of varying densities and small commercial establishments. The site is located in the Ventura Village neighborhood.

PROJECT DESCRIPTION. The applicant is proposing to construct an addition to the existing Phillips Community Center Aquatics Facility. The building today is used as a community center as the existing pool in the building has been closed since 2008. The project scope would include the renovation of the existing six-lane pool and the addition of a second four-lane teaching pool. The new pool would have a ramped entry. With two pools the facility could provide activities from learn-to-swim programs to competitive swim meets.

The project would also include the renovation of the existing shower and locker facilities and spectator seating area, the creation of family changing rooms and the creation of a new lobby and reception area with support spaces, a small community room, public restrooms and two new family changing areas.

The parking lot will also be expanded as part of this project. The proposed addition would be built over an existing parking area so the applicant is proposing to remove green space on the west side of the property in order to expand the parking lot.

A portion of the building is occupied by Waite House, a community center that is operated separately from the Phillips Community Center Aquatics Facility. A community center is not a permitted use in the R2B Two-family District and therefore Waite House is a non-conforming use in the building.

RELATED APPROVALS. In December of 2015, the City Planning Commission approved a site plan review application for an approximately 8,600 square foot addition to the building. The variance approvals from 2015 are still valid. Besides being slightly larger, the interior layout of the building is different than it was in 2015. As a result, there is no longer an entrance proposed along the East 24th Street side of the addition.

Planning Case #	Application	Description	Action
BZZ-7489	Variances and site plan review	For an approximately 8,600 square foot addition	Approved, December 7, 2015

PUBLIC COMMENTS. No public comment letters have been received for this project. Any correspondence received prior to the public meeting will be forwarded on to the Planning Commission for consideration.

ANALYSIS

SITE PLAN REVIEW

The Department of Community Planning and Economic Development has analyzed the application based on the required findings and applicable standards in the site plan review chapter:

1. Conformance to all applicable standards of Chapter 530, Site Plan Review.

BUILDING PLACEMENT AND DESIGN

Building placement – *Requires alternative compliance*

- The proposed building addition will reinforce the street wall, maximize natural surveillance and visibility and facilitate pedestrian access and circulation. The building addition will be located closer to the front and corner side property lines than the existing building, the existing principal entrance facing 11th Avenue South will be enhanced and there will be windows on all sides of the building addition that increase opportunities for people to observe adjacent spaces.
- The front yard setback along 13th Avenue South is 26 feet and the corner side yard setback along East 24th Street is ten feet. In 2015, a variance was approved to allow the building addition to be located 20 feet from the front property line. The building addition will be set back 35 feet from the corner side property line. Alternative compliance is required.
- Between the building addition and the front and corner side property lines there will be landscaping.
- The existing on-site accessory parking lot is located between the building and the front property line along 11th Avenue South and the corner side property line along East 24th Street. This same condition will remain after the building addition is complete although the parking lot towards 11th Avenue South will be expanded and the parking lot towards East 24th Street will be reduced. Alternative compliance is required.

Principal entrances – *Meets requirements*

- There are two existing principal entrances leading into the building; one faces 11th Avenue South and one faces 13th Avenue South. Both of these entrances will remain after the building addition is complete.
- The principal entrance facing 11th Avenue South will be enhanced through the use of a new canopy and signage.

Visual interest – *Meets requirements*

- The building addition walls provide architectural detail and contain windows in order to create visual interest. The parapet wall on the addition facing East 24th Street will be sloped and some of the windows will be glazed with a film in various colors.
- There are no blank, uninterrupted walls exceeding 25 feet in length.

Exterior materials – *Requires alternative compliance*

- The applicant is proposing pre-cast concrete panels with exposed aggregate, metal and glass as the building addition's primary exterior materials. Each elevation would comply with the City's durability standards for exterior materials (see Table 1). Please note that exterior material changes at a later date may require review by the Planning Commission and an amendment to the site plan review. In order to construct the addition, the brick on the wall where the addition will be located

needs to be removed. The applicant is proposing to cover the exposed portion of the existing wall with EIFS. CPED does not believe that EIFS is a durable material. Alternative compliance is required.

- In addition, the application is consistent with the City's policy of allowing no more than three exterior materials per elevation, excluding windows, doors, and foundation materials.
- Plain face concrete block is not proposed along any public streets, sidewalks, or adjacent to a residence or office residence district.
- The exterior materials and appearance of the walls of the building addition will be compatible with the exterior materials and appearance of the existing building.

Table 1. Percentage of Exterior Materials per Elevation

Material	Allowed Max	North	South	East	West
Concrete	**100%**	NA	87.7%	97.2%	58.4%
Metal Panel	**75%**	NA	12.3%	2.8%	41.6%

Windows – *Meets requirements with Conditions of Approval*

- For nonresidential uses, the zoning code requires that no less than 30 percent of the walls on the first floor are windows with clear or lightly tinted glass with a visible light transmittance ratio of six-tenths (0.6) or higher. Based on the floor plans, all proposed shelving, mechanical equipment, and other similar fixtures allow views into and out of the building between four and seven feet above the adjacent grade. The project is not in compliance with the minimum window requirement facing 11th Avenue South, East 24th Street or 13th Avenue South (see Table 2). The amount of windows needed to comply with the minimum requirements is minimal. CPED is recommending that there be 149 square feet of windows facing 11th Avenue South, 370 square feet of windows facing East 24th Street and 149 square feet of windows facing 13th Avenue South.
- The windows in the building addition are vertical in nature and are evenly spaced across the building walls except along East 24th Street.

Table 2. Percentage of Windows per Applicable Elevation

	Code Requirement		Proposed	
Nonresidential Uses				
1st floor facing 11th Avenue South	30% minimum	149 sq. ft.	23%	116 sq. ft.
1st floor facing East 24th Street	30% minimum	370 sq. ft.	24%	294 sq. ft.
1st floor facing 13th Avenue South	30% minimum	149 sq. ft.	23%	112 sq. ft.

Ground floor active functions – *Meets requirements*

- The entire ground floor of the building addition facing 11th Avenue South, East 24th Street and 13th Avenue South contain active functions.

Roof line – *Meets requirements*

- The principal roof line of the building addition will be flat; however, the parapet wall along East 24th Street is proposed to be sloped for architectural interest. The existing building has a flat roof.

Parking garages – *Not applicable*

- There are no parking garages proposed as part of this project.

ACCESS AND CIRCULATION

Pedestrian access – *Meets requirements*

- There are clear and well-lit walkways at least four feet in width connecting building entrances to the adjacent public sidewalk and on-site parking facilities.

Transit access – *Not applicable*

- No transit shelters are proposed as part of this development.

Vehicular access – *Meets requirements*

- Vehicular access and circulation has been designed to minimize conflicts with pedestrian traffic and with surrounding residential uses.
- There are two existing curb cuts along East 24th Street. One of these curb cuts will be closed and a new curb cut will be constructed along 11th Avenue South.
- There are no public alleys adjacent to the site.
- Service vehicle access does not conflict with pedestrian traffic. There is a designated drop off zone near the entrance facing 11th Avenue South that will also be used for delivery vehicles.
- The maximum impervious surface allowance in the R2B zoning district is 60 percent. In 2015, a variance was approved to increase the impervious surface maximum from 60 percent to 74 percent. The proposed impervious surface amount is 89,421 square feet or 73 percent.

LANDSCAPING AND SCREENING

General landscaping and screening – *Meets requirements*

- The overall composition and location of landscaped areas complement the scale of development and its surroundings.
- At least 20 percent of the site not occupied by the building is landscaped. The applicant is proposing approximately 33,910 square feet of landscaping on site, or approximately 53 percent of the site not occupied by buildings (see Table 3).
- The applicant is proposing at least one canopy tree per 500 square feet of the required landscaped area, including all required landscaped yards. The tree requirement for the site is 26 and the applicant is proposing a total of 31 trees (nine existing and 22 new).
- The applicant is proposing at least one shrub per 100 square feet of the required landscaped area, including all required landscaped yards. The shrub requirement for the site is 128 and the applicant is proposing 257 shrubs.
- The remainder of the required landscaped area is covered with turf grass, native grasses, perennial flowering plants and coniferous trees.

Table 3. Landscaping and Screening Requirements

	Code Requirement	Proposed
Lot Area	--	123,331 sq. ft.
Building Footprint	--	47,759 sq. ft.
Remaining Lot Area	--	75,572 sq. ft.
Landscaping Required	15,114 sq. ft.	33,910 sq. ft.
Canopy Trees (1:500 sq. ft.)	30 trees	31 trees
Shrubs (1:100 sq. ft.)	151 shrubs	257 shrubs

Parking and loading landscaping and screening – *Requires alternative compliance*

- The zoning code requires that a seven-foot wide landscaped yard be provided when a parking or loading facility is fronting along a public street, public sidewalk or public pathway. A landscaped yard is required along 11th Avenue South and East 24th Street. The landscaped yard along 11th Avenue South is a minimum of 11 feet deep and the landscaped yard along East 24th Street is between five and 15 feet deep. Alternative compliance is required.
- Screening three feet in height and 60 percent opaque is required when a parking or loading facility is fronting along a public street, public sidewalk or public pathway. The applicant is proposing to plant shrubs along 11th Avenue South and East 24th Street that will meet the screening requirements of Chapter 530, Site Plan Review.
- The zoning code requires that a seven-foot wide landscaped yard be provided when a parking or loading facility is abutting or across an alley from a residence or office residence district or a permitted or conditional residential use. A landscaped yard is required along the north property line. The applicant is proposing to provide a 13-foot deep landscaped yard along the north property line.
- Screening six feet in height and 95 percent opaque is required when a parking or loading facility is abutting or across an alley from a residence or office residence district or a permitted or conditional residential use. There is an existing solid wood fence located along the north property line; however, the fence is set back 30 feet from the front property line along 11th Avenue South. The applicant is proposing to plant seven coniferous trees between the front property line and where the solid wood fence is located. This will meet the screening requirements of Chapter 530, Site Plan Review.
- Not less than one tree shall be provided for every 25 linear feet of parking lot frontage. The parking lot has 193 feet of street frontage on 11th Avenue South which would require eight trees. The applicant is proposing to have five trees along 11th Avenue South. The parking lot has 248 feet of street frontage on East 24th Street which would require ten trees. The applicant is proposing to have eight trees along East 24th Street. Alternative compliance is required.
- In parking lots of 10 spaces or more, no parking space shall be located more than 50 feet from an on-site deciduous tree. All of the parking spaces are located within 50 feet of an on-site deciduous tree.
- Tree islands in parking lots must have a minimum width of seven feet in any direction. All of the proposed tree islands in the parking lot measure at least seven feet in every direction

ADDITIONAL STANDARDS

Concrete curbs and wheel stops – *Meets requirements*

- The parking lot will be defined by a six-inch by six-inch continuous concrete curb. Stormwater runoff will be directed to an underground infiltration system and turn infiltration basin.

Site context – *Meets requirements*

- The proposed building addition will not block views of any landmark buildings, significant open spaces or water bodies.
- The proposed building addition will not shadow public spaces or adjacent residential properties.
- The proposed building addition will not generate wind currents at the ground level.

Crime prevention through environmental design – *Meets requirements*

- The site plan complies with crime prevention design elements as the entrances are oriented towards the streets, walkways direct people to and from the public sidewalks to the building entrances, there will be windows on all sides of the building addition that increase opportunities for people to observe adjacent spaces and there will be lights located near all of the building entrances and in the surface parking lot.

Historic preservation – *Not applicable*

- This site is neither historically designated nor is it located in a historic district.

2. Conformance with all applicable regulations of the zoning ordinance.

The proposed use is permitted in the R2B Two-family District.

Off-street Parking and Loading – *Meets requirements*

- In 2015, a variance was approved to reduce the minimum parking requirement from 106 spaces to 92 spaces. The parking requirement now is 107 spaces and a total of 94 spaces will be provided (see Table 4).

Table 4. Vehicle Parking Requirements Per Use (Chapter 541)

Use	Minimum	Reductions	Total with Reductions	Maximum Allowed	Proposed
Spectator seating area	46	--	46	As determined by the Zoning Administrator	92
2 basketball courts	12	--	12		
2 pools	23	--	23		
Office, teen center, dining and kitchen	25	--	26		
Total	**106**	**--**	**107**	**107**	**94**

Table 5. Bicycle Parking Requirements (Chapter 541)

Use	Minimum	Short-Term	Long-Term	Proposed
Park, public	None	--	--	12 short-term

Table 6. Loading Requirements (Chapter 541)

Use	Loading Requirement	Minimum Requirement	Proposed
Park, public	None	None	1 small

Building Bulk and Height – *Meets requirements*

Table 7. Building Bulk and Height Requirements

	Code Requirement	Proposed
Lot Area	--	123,331 sq. ft. / 2.83 acres
Gross Floor Area	--	59,543 sq. ft.
Floor Area Ratio (Minimum)	--	.48
Floor Area Ratio (Maximum)	.5	
Building Height (Maximum)	2.5 stories or 35 ft., whichever is less	2 stories or 25 ft.

Lot Requirements – *Meets requirements*

- In 2015, a variance was approved to increase the impervious surface maximum from 60 percent to 74 percent. The proposed impervious surface amount if 89,421 square feet or 73 percent (see Table 8).

Table 8. Lot Requirements Summary

	Code Requirement	Proposed
Dwelling Units (DU)	--	0 DUs
Density (DU/acre)	--	0 DU/acre
Lot Area (Minimum)	20,000 sq. ft.	123,331 sq. ft.
Impervious Surface Area (Maximum)	60%	73%
Lot Coverage (Maximum)	45%	39%
Lot Width (Maximum)	100 ft.	200 ft. or more on each street frontage

Yard Requirements – *Meets requirements*

- In 2015, variances were approved to reduce the required front yard setbacks along both 11th Avenue South and 13th Avenue South, the corner side yard setback along East 24th Street and the north interior side yard setback (see Table 9).

Table 9. Minimum Yard Requirements

Setback	Zoning District	Overriding Regulations	Total Requirement	Proposed
Front, 11th Avenue South	30 ft.	--	30 ft.	13 ft. for the parking lot
Front, 13th Avenue South	26 ft.	--	26 ft.	20 ft. for the building
Corner Side, East 24th Street	10 ft.	--	10 ft. 8 ft. for parking lots	5 ft. for the parking lot
Interior side (north)	7 ft.	--	7 ft.	40 ft. for the building

Signs – Choose an item.

- Signs are subject to Chapter 543 of the Zoning Code. Parks are allowed one wall identification sign not exceeding 32 square feet. The maximum height of a wall sign is limited to 14 feet or top of wall, whichever is less. On a corner lot, two such signs per building are allowed. In addition, one monument sign not exceeding 32 square feet in area and eight feet in height is allowed. Either the wall sign or the monument sign, but not both, may include a dynamic changeable copy sign. The dynamic changeable copy sign portion of the sign shall not exceed 16 square feet. Either the wall sign or the monument sign, but not both, may be illuminated. Dynamic changeable copy signs shall be allowed accessory to parks only when located on the same zoning lot as an enclosed recreation center.
- Waite House has an existing sign located on the east side of the building. Since Waite House is a nonconforming use it is allowed one, nonilluminated, flat wall identification sign, not exceeding 16 square feet. The maximum height of the wall sign is limited to 14 feet or top of wall, whichever is less. The existing Waite House sign is approximately 16 square feet in size and has an overall height of 14 feet.
- The applicant is proposing to have one freestanding monument sign, with an integrated dynamic changeable copy sign, located along East 24th Street. The proposed monument sign meets the dimensional requirements of the zoning code.
- The applicant is also proposing to have one sign located over the new canopy located near the existing entrance on the west side of the building. The proposed sign would measure 47 square feet in area and has an overall height of 12 feet. Since two wall signs measuring 32 square feet in area would be allowed for the park, it has been determined that the total sign area can be combined into one larger sign as long as there isn't any additional signage installed on the building.

Screening of Mechanical Equipment – *Meets requirements with Conditions of Approval*

- There will be mechanical equipment located on the roof of the building. The applicant is proposing to screen the rooftop equipment with building materials similar to the exterior materials of the building itself. CPED is recommending that whichever material is picked meets the requirements of Chapter 535, Regulations of General Applicability.
- There will also be mechanical equipment located on the ground along 13th Avenue Southeast. The applicant has applied for a variance to allow the equipment in the required front yard. The applicant is proposing to wrap the equipment so it is visually more appealing. The applicant is also proposing to plant perennial grasses around the transformer for additional screening.

Refuse Screening – *Meets requirements*

- The applicant is proposing to have the trash and recycling containers housed in an enclosure located just west of the proposed addition. The four-sided enclosure will be constructed out of wood and will be two feet taller than the containers themselves.

Lighting – *Meets requirements*

- The lighting plan showing footcandles was submitted as part of the application materials. The lighting levels are in conformance with the standards of Chapter 535, Regulations of General Applicability.

Fences – *Not applicable*

- The applicant is not proposing to have any fencing on the site.

Specific Development Standards – *Not applicable*

Overlay District Standards – *Not applicable*

3. Conformance with the applicable policies of The Minneapolis Plan for Sustainable Growth.

The Minneapolis Plan for Sustainable Growth identifies the site as park and open space on the future land use map. The proposed development is consistent with the following principles and policies outlined in the comprehensive plan:

Urban Design Policy 10.8: Strengthen the character and desirability of the city's urban neighborhood residential areas while accommodating reinvestment through infill development.

10.8.8 Appropriate non-residential land uses, such as institutional, public and suitable commercial uses, should be integrated into low density residential areas through proper building location and design, landscaping, and other site improvements.

Urban Design Policy 10.13: Work with institutional and public partners to assure that the scale and form of new development or expansion will occur in a manner most compatible with the surrounding area.

10.13.3 Encourage institutional uses and public buildings and facilities to incorporate architectural and site design that is reflective of their civic importance and that identifies their role as focal points for the community.

10.13.4 Promote active uses at the ground floor level.

Urban Design Policy 10.18: Reduce the visual impact of automobile parking facilities.

10.18.1 Require that parking lots meet or exceed the landscaping and screening requirements of the zoning code, especially along transit corridors, adjacent to residential areas, and areas of transition between land uses.

10.18.2 Parking lots should maintain the existing street face in developed areas and establish them in undeveloped areas through the use of fencing, walls, landscaping or a combination thereof along property lines.

10.18.3 Locate parking lots to the rear or interior of the site.

10.18.4 Provide walkways within parking lots in order to guide pedestrians through the site.

4. Conformance with applicable development plans or objectives adopted by the City Council.

The site is not located within the boundaries of a small area plan.

5. Alternative compliance.

The Planning Commission or zoning administrator may approve alternatives to any site plan review requirement upon finding that the project meets one of three criteria required for alternative compliance. Alternative compliance is requested for the following requirements:

- **Building placement.** The corner side yard setback along East 24th Street is ten feet. The building addition will be set back 35 feet from the corner side property line. The building is currently set back 96 feet from the corner side property line. The building addition will bring the building closer to conformance with the standards of Chapter 530, Site Plan Review. CPED is recommending that the City Planning Commission grant alternative compliance.
- **Parking Lot Location.** The existing on-site accessory parking lot is located between the building and the front property line along 11th Avenue South and the corner side property line along East 24th Street. This same condition will remain after the building addition is complete although the parking lot towards 11th Avenue South will be expanded and the parking lot towards East 24th Street will be reduced. The project required a parking variance of 14 spaces in 2015. If the parking lot was not expanded towards 11th Avenue South a greater parking variance would be needed. CPED is recommending that the City Planning Commission grant alternative compliance.
- **Durable Materials.** In order to construct the addition, the brick on the wall where the addition will be located needs to be removed. The applicant is proposing to cover the exposed portion of the existing wall with EIFS. The portion of the existing wall that will be coated in EFIS is located on the upper portion of the wall and is confined to the area just above where the addition will be constructed. CPED is recommending that the City Planning Commission grant alternative compliance to allow EFIS on just that portion of the existing building above where the addition will be constructed.
- **Evenly Spaced Windows.** The windows in the building addition are evenly spaced except along East 24th Street. The windows on this side of the building are concentrated on the far western end and in the middle of the building addition. However, there are several additional windows glazed with film in various colors located along the building wall. For privacy issues the applicant is proposing to group the windows together. CPED is recommending that the City Planning Commission grant alternative compliance.
- **Landscaped Yards.** The zoning code requires that a seven-foot wide landscaped yard be provided when a parking or loading facility is fronting along a public street, public sidewalk or public pathway. A portion of the landscaped yard along East 24th Street is five feet deep. The property line along East 24th Street jogs north ten feet just west of the 12th Avenue South alignment. If this jog did not occur, the landscaped yard could be provided. In addition, the project required a parking variance of 14 spaces in 2015. If the landscaped yard were adhered a greater parking variance would be needed. CPED is recommending that the City Planning Commission grant alternative compliance.
- **Trees Around Parking Lots.** Not less than one tree shall be provided for every 25 linear feet of parking lot frontage. The parking lot has 193 feet of street frontage on 11th Avenue South which would require eight trees. The applicant is proposing to have five trees along 11th Avenue South. However, between the on-site trees and the trees in the right-of-way there are seven trees along 11th Avenue South. The parking lot has 248 feet of street frontage on East 24th Street which would require ten trees. The applicant is proposing to have eight trees along East 24th Street. However, between the on-site trees and the trees in the right-of-way there are 12 trees along East 24th

Street. CPED is recommending that that the City Planning Commission grant alternative compliance.

RECOMMENDATIONS

The Department of Community Planning and Economic Development recommends that the City Planning Commission adopt staff findings for the application by the Minneapolis Park and Recreation Board for the property located at 2323 11th Avenue South:

A. Site Plan Review.

Recommended motion: **Approve** the application for an approximately 9,500 square foot addition, subject to the following conditions:

1. All site improvements shall be completed by August 15, 2018, unless extended by the Zoning Administrator, or the permit may be revoked for non-compliance.
2. CPED staff shall review and approve the final site, elevation, landscaping, and lighting plans before building permits may be issued.
3. There shall be at least 149 square feet of windows facing 11th Avenue South, 370 square feet of windows facing East 24th Street and 149 square feet of windows facing 13th Avenue South.
4. There shall be no other wall signs for the Phillips Community Center Aquatics Facility attached to the building besides the proposed sign over the new canopy located near the existing entrance on the west side of the building.
5. The transformer shall be wrapped. The design of the wrap shall be reviewed and approved by CPED.
6. Perennial grasses shall be planted around the transformer for additional screening.
7. All mechanical equipment shall be screened as required by the standards of Chapter 535, Regulations of General Applicability.

ATTACHMENTS

1. Written description and findings submitted by applicant
2. Zoning map
3. Survey
4. Civil plans
5. Landscaping plan
6. Electrical plan
7. Elevations and floor plans
8. Correspondence

Minneapolis
Park & Recreation Board

Phillips Community Center Aquatics Facility

Submittal to the City of Minneapolis

Administrative Site Plan Review

General Land Use Application

July 15, 2016

JLG architects

Linda McCracken-Hunt, FAIA
Principal
612.314.4749 lmccrackenhunt@jlgarchitects.com

Site Description and Present Use

The site is bordered by 13th Avenue South to the east, East 24th Street to the south, and 11th Avenue South to the west in south Minneapolis. The existing Phillips Community Center is a 2-story building with a footprint of 38,283 sf, taking up approximately 31% of the site. The existing site includes 66 parking spaces to the south and west of the building. There is a small playground on the west side of the site.

Surrounding Properties and Neighborhood

The site is surrounded by single family dwellings to the north, south, east and west. Commercial development occurs approximately 5 blocks to the west on Chicago Avenue South, and 3 blocks to the north on East Franklin Avenue.

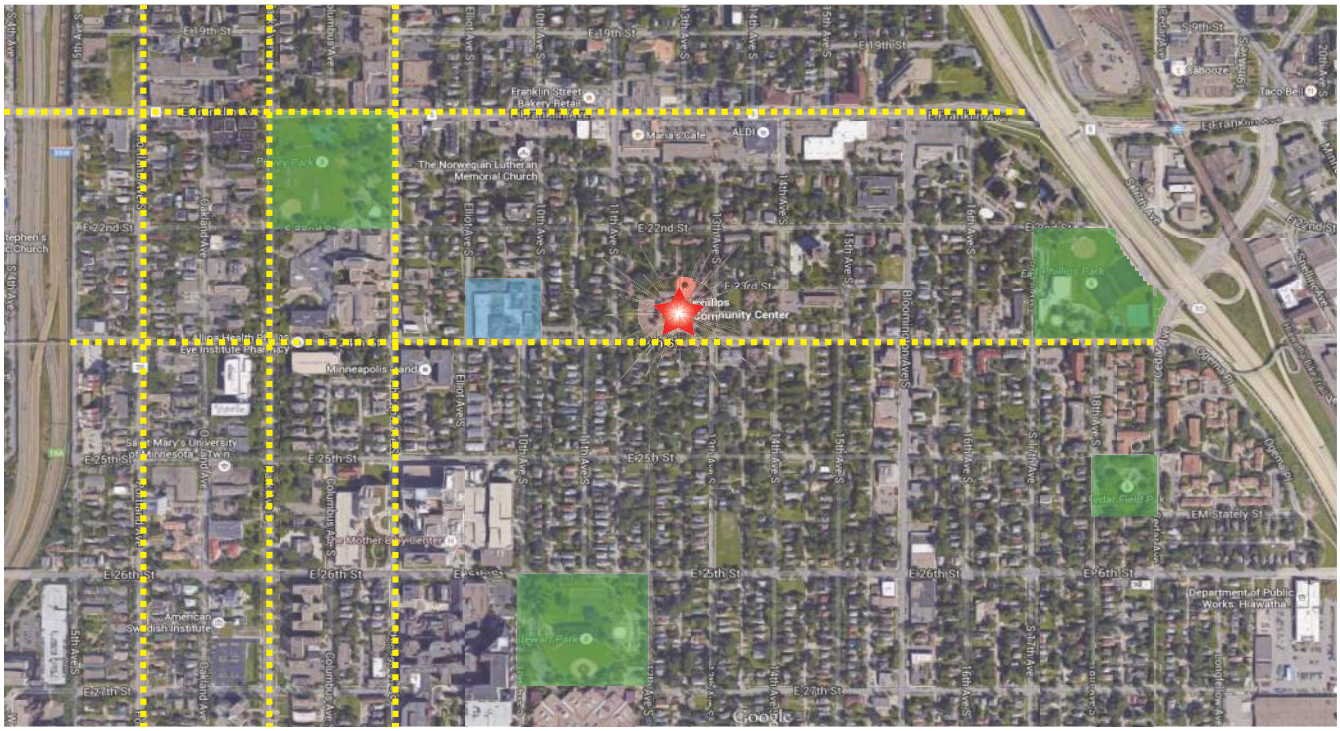

Neighborhood Plan

view from E 24th Street toward the west side of the Site

view from E 24th Street toward the existing building

view from E 24th Street toward the Site

southeast corner of the existing building, location of new addition

East side of site, looking west, location of new addition

East side of site

West side of site, existing parking lot entry

West side of site, looking west

West side of existing building

West side of existing building, from 11th Avenue South

Neighborhood view across 11th Avenue South

Neighborhood view across E 24th Street

The Minneapolis Park and Recreation Board hired Studio Five Architects, now JLG Architects, to design an addition and renovation to the Phillips Community Center at 2323 11th Avenue South in Minneapolis. This project results from legislation passed by the State of Minnesota in support of learn-to-swim activities in the city of Minneapolis. This state funding of $1,175,000 is combined with funding from multiple other sources to support the project.

The existing pool in the Phillips Community Center was closed in 2008. The renovation and addition of the Phillips Community Center Aquatics Facility will result in two pools that can serve a variety of needs, from learn-to-swim programs to competitive swim meets.

The project scope includes a new addition with:

- a 4-lane teaching pool with ramped entry and infrastructure to support a future spa/hot tub,
- new family locker room with five (5) private changing rooms, restrooms and showers.
- lobby, reception area, staff area, administrative and support spaces
- small community room
- public toilets

Renovated space in the existing Phillips Community Center includes:

- renovation of the existing pool and natatorium
- renovation of the abandoned locker and shower facilities
- creation of new reception area in underutilized space.
- removal of office and conference rooms previously constructed over an abandoned spectator seating area, restoration of the spectator seating area for new use
- renovation and relocation of existing teen center and fitness center

Site Plan Review

Building Placement and Design

- The existing building and new addition reinforce the street walls to which they are adjacent, providing natural surveillance and facilitate pedestrian circulation.

- The paved area at the new entrance will be patterned concrete walks with inset planting areas. Bike racks are provided. Refer to the Site Plan for more information.

- There are no areas of the new addition that are over 25 feet in length void of windows, entries, recesses or projections, or other architectural elements.

- The percentage of Windows required for Elevations facing a Public Street, Sidewalk, Pathway, or On-Site Parking is 22.9% on the west elevation, 22.7% on the west elevation and 24.7% on the south elevation, which exceeds the requirement of 20% as recommended by staff in CPED in the Staff Report and approved by the City Planning Commission on December 7, 2015.
-
- A majority of the glass shown in the elevations is clear or lightly tinted glass with a visible light transmittance ratio of 0.6 or higher. The elevations show some small colored glass windows; this is a colored film applied to clear or lightly tinted glass. The colored films have differing light transmittance ratios that range from 0.35 to 0.62. The small windows with the colored films were not included in the glazing percentages shown above.

- The exterior materials of the addition include glass, precast concrete, and metal. The exterior materials are compatible with the existing brick building. The precast panels will have a warm color that is compatible with the existing red brick. The addition's lower scale and openness are in contrast to the large brick facades with minimal openings. The addition is an improvement over the existing conditions.

- The existing building's south wall, above the new addition, will need to be rebuilt in order to address thermal, vapor, and air barrier connectivity between the existing building and the new addition. The proposed exterior material for the wall above the addition is EIFS, colored and textured to match the smooth precast concrete panels. The EIFS will be at a height of 13 feet to 30 feet above grade and will not be accessible by pedestrians as recommended by staff in CPED in the Staff Report and approved by the City Planning Commission on December 7, 2015.

- The windows are vertical in nature, with panes of colored glass as well as lightly tinted clear glass. Small highlighted windows of various colors dot the façade for interest both inside and outside the building.

- The addition has a flat roof, with a slanted parapet wall, higher on the east side, to help screen the mechanical equipment on the roof. This roof line is similar to surrounding commercial buildings in the area. Surrounding buildings adjacent to the site are single-family housing with pitched roofs.

- The building height is in scale with the neighborhood.

Precast Panels:
Color and Texture illustration for the ribbed texture shown on elevations

Precast Panels:
Smooth illustration for the smooth texture shown on elevations

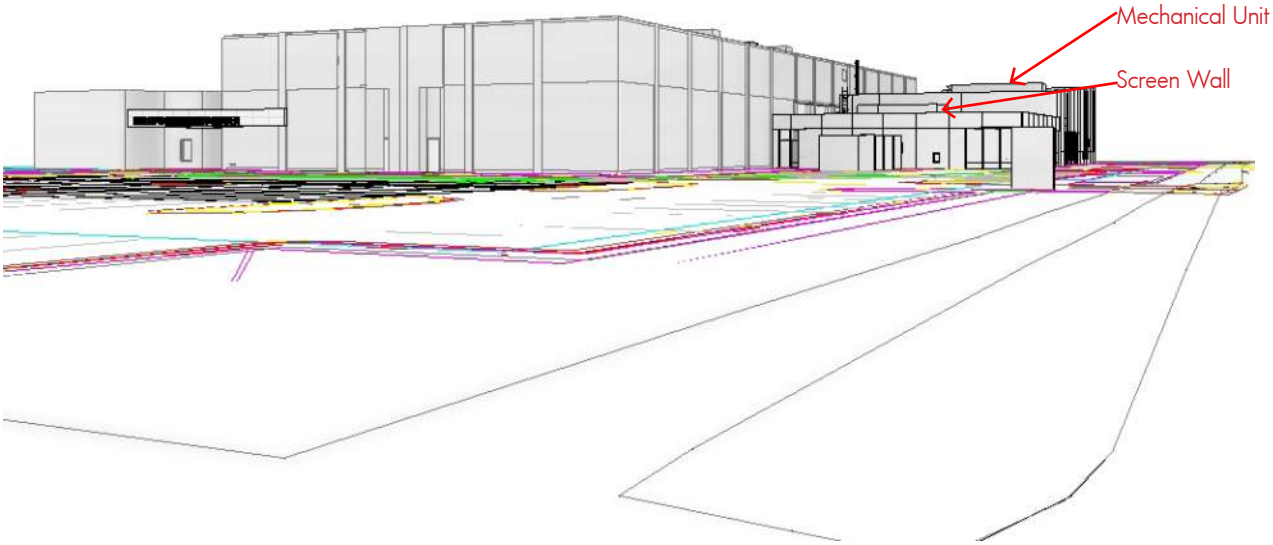

View of mechanical unit on the higher roof and screen wall covering the mechanical unit on the lower roof. View is from the corner of 11th Avenue South and East 24th Street

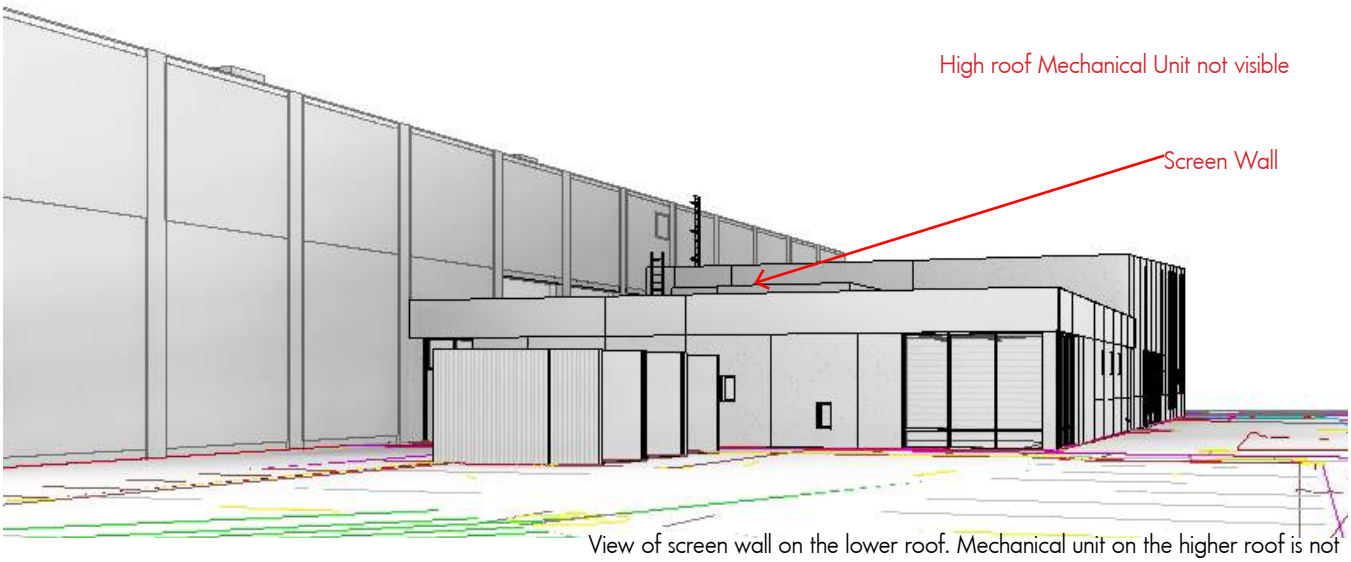

View of screen wall on the lower roof. Mechanical unit on the higher roof is not visible. View is from the entrance drive on East 24th Street

Access and Circulation

- Pedestrian Access: There are walkways of at least four feet in width that connect the building entrances to the public sidewalks.
- Transit Access: There are no transit shelters proposed as a part of this project.
- Vehicle Access: Vehicular access and circulation is designed to minimize conflicts with pedestrian traffic and with surrounding residential uses.
- Reduction of impervious surface: The site has 89,421 square feet, or 73%, of the site as impervious surface, as recommended by staff in CPED in the Staff Report and approved by the City Planning Commission on December 7, 2015. The site minimizes the use of impervious surfaces as much as possible, while accommodating the on-site parking needed. The entry plaza has cutouts in the surface for plantings to minimize the amount of impervious surface. Below grade stormwater storage is also provided on site.

Landscape and Screening

- Our site plan illustrates that at least 20% of the site not occupied by building is landscaped.
- Parking landscaping and screening: The landscape plans were designed to meet or exceed the requirements as recommended by staff in CPED in the Staff Report and approved by the City Planning Commission on December 7, 2015. The southwest corner of the site and the areas running north and east are currently bermed high enough to meet screening standards.
- The site has good tree and canopy cover from mature trees in the right-of-way boulevard and preserved trees between the parking lot and sidewalk. The result is a tree-lined property with extensive canopy cover extending from the street into the site. This provides a good enclosure that visually tempers the impacts of the parking lot on the public realm. The proposed condition will result in 8 trees (7 existing and 1 new) covering 200 linear feet (1 tree per 25 feet ratio) of landscape area and turf grass ground cover.
- The number of shrubs meet requirements.
- Interior landscaping of parking lots: parking spaces are located within 50 feet from the center of an on-site deciduous tree. Tree islands within the interior of the parking lot have a minimum width of 7 feet.
- Ecological Function: Stormwater management principles are in place in the site plan, including below grade stormwater storage and a recessed turf area for stormwater storage.

Additional Standards

- Continuous concrete curb and gutter are provided for on-site retention and filtration.
- The proposed addition will not block views of any landmark buildings, significant open spaces, or water bodies.
- The proposed addition will cast minimal shadows on the site.
- The proposed addition will not generate significant wind currents.
- The site plan complies with crime prevention design elements. The organization of the site, including the buildings, landscaping and walkways allows views into and out of the site from the public right-of-way. The site layout guides people into and out of the site. There are light fixtures that provide ample lighting levels.
- The site is neither historically designated nor located in a historic district.

Off-Street Parking and Loading

- The parking count for the project was determined by Hilary Dvorak, by examining the existing and new program uses. Dvorak's calculation determined a total parking need of 107 spaces, an increase by one space from what was required at the time of the previous review. A variance lowering the minimum parking requirement to 92 spaces was recommended by staff in CPED in the Staff Report and approved by the City Planning Commission on December 7, 2015. The proposed parking count of 94 spaces exceeds this amount.

Bicycle Parking

- CPED noted that 12 bicycle parking spaces would be required as a condition of lowering the minimum parking count. New bike racks at the west entrance in addition to existing bike racks at the east entrance amount to 27 bicycle parking spaces, in excess of what was recommended by staff in CPED in the Staff Report and approved by the City Planning Commission on December 7, 2015.

Fences

- There are no new fences proposed to be located within the site boundaries.

Screening of Mechanical Equipment

- The mechanical equipment on the roof of the addition is screened in the two locations shown, per the requirements of Chapter 535, Regulations of General Applicability. Refer to the building elevations.

Refuse Screening

- The solid waste collection point will be enclosed and screened per Zoning Code requirements. The solid waste collection point is located on the south side of the parking lot for ease of access from the addition entrance. Refer to Site Plan and elevations.

Lighting

- A Lighting Plan showing footcandles levels was submitted as a part of the application materials.

- The proposed addition requires the relocation of the existing electrical transformer and it disconnect switch. The existing transformer is located south of the existing building in the location of the proposed new addition. The transformer enters the existing building on the south side and connects with the electrical switchgear. The transformer will be relocated to the southeast corner of the existing building. This allows the transformer and its exterior disconnect switch to be relocated prior to the start of construction of the new addition. This location also allows the existing electrical service to remain in place inside the building, and make the connection overhead through the renovated pool area. The location of the transformer on the southeast corner of the existing building is a good location on the site plan, as it is away from building entrances, and is separated from the sidewalk with an existing retaining wall. We are proposing a "wrap" on the transformer in lieu of a screened enclosure, due to the tight conditions between the existing building and the retaining wall. The design of the wrap wrap will be reviewed and approved by CPED in accordance with the recommendations by staff in CPED in the Staff Report and approval by the City Planning Commission on December 7, 2015.

Existing Transformers on the south side of the building

Proposed location to relocate the transformers on the east side of the existing building.

"Wrap" concept on the transformer, graphic image to be determined

Yard Requirements

CPED recommended and the City Planning Commission approved a setback variance for the following conditions on December 7, 2015.

- The west edge of the site, bordering 11th Avenue South, has a 30-foot front yard setback requirement to match the houses north of the site. In order to provide the parking spaces shown on the site plan, we need to project into the front yard setback on the west side of the site approximately 17 feet, with a setback of approximately 13 feet.

- The east edge of the site, bordering 13th Avenue South, has a 26-foot front yard setback requirement to match the houses north of the site. The existing building and proposed addition on the east edge of the site are set back approximately 20 feet from the east property line on 13th Avenue South. The new addition aligns with the existing building.

- The south edge of the site, bordering East 24th Street, has an odd property line condition that jogs the property line away from the street. This jog in the property line causes us to request a variance on the 10 foot side yard setback for the parking.

- The relocation of the electrical transformer places it in the setback, as described earlier in this document.

- The monument sign is located 5 feet into the corner side yard setback on East 24th Street, as a result of the odd property line condition that jogs away from the street.

Signage - *Requires a Variance*

Existing Waite House sign to remain

The project is governed by Chapter 543, Library & Park. The project can have three signs (2 on the building (corner lot) and 1 monument sign).

The Waite House banner sign at the east entrance will remain and a new canopy with a sign at the west entrance will be constructed. Refer to building elevations.

A new monument sign is proposed to be added on the site per the drawing below. Refer to the Site Plan for sign location.

The signage adjustment will not significantly increase or lead to sign clutter in the area. The sign adjustment will allow signage that relates in size, shape, material, color, illumination and character to the function and architectural character of the building.

Existing Waite House sign to remain

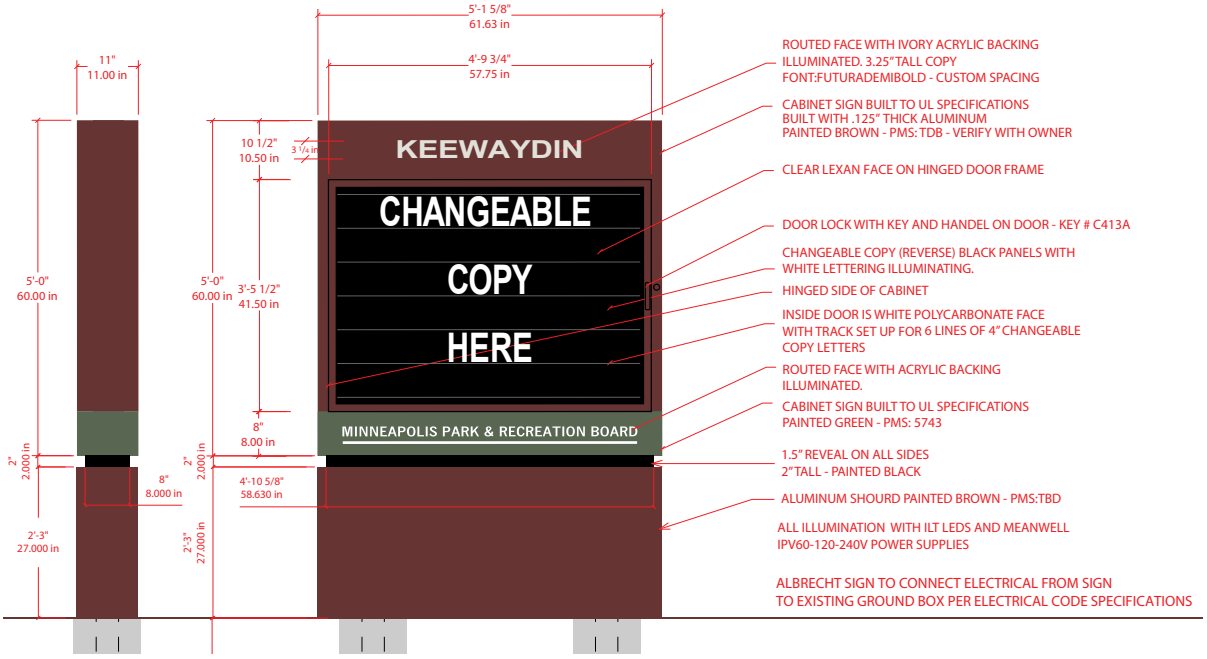

Proposed New Monument Sign, refer to Site Plan for location

Minneapolis Park and Recreation Board **6th**

NAME OF APPLICANT WARD

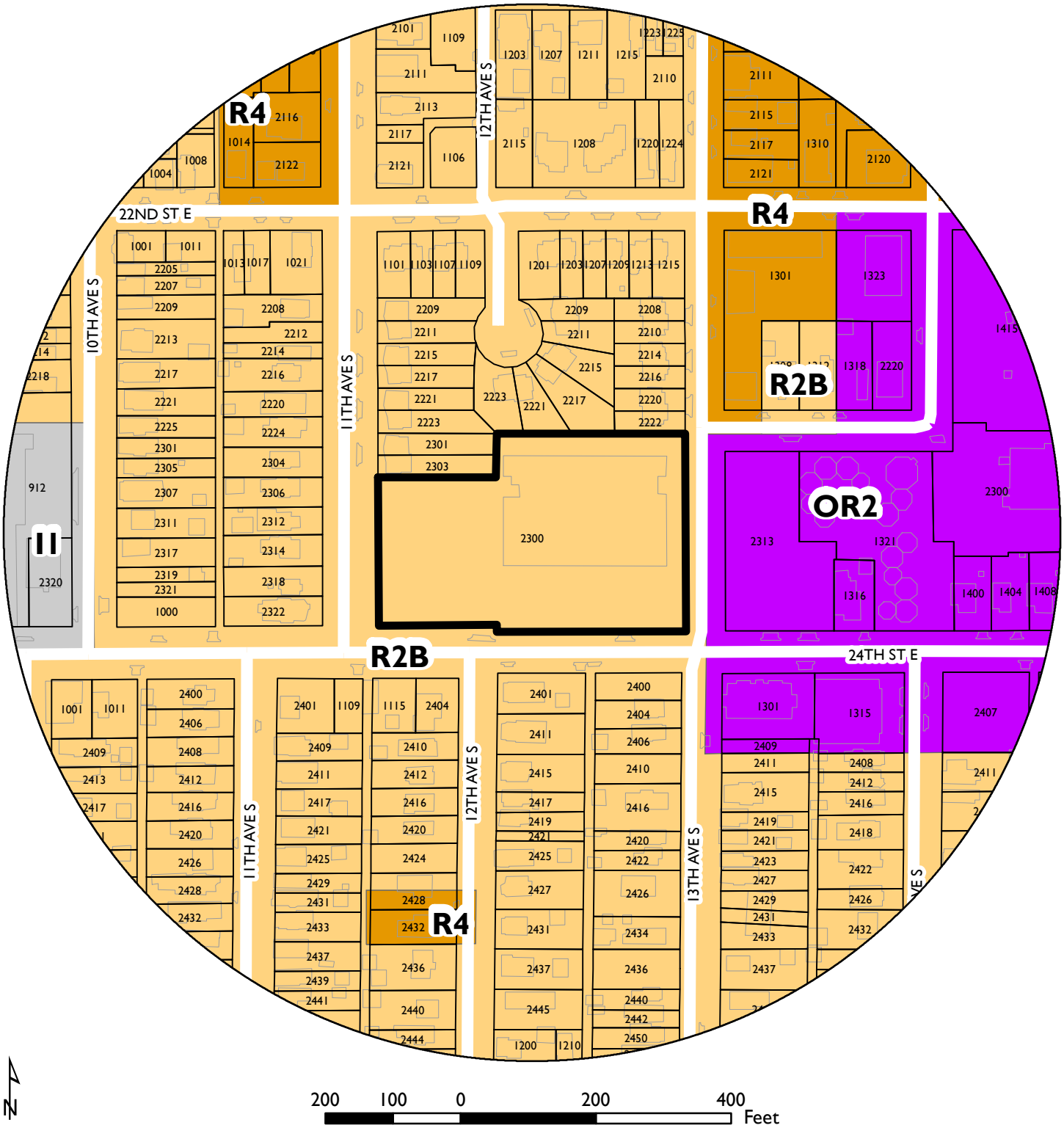

PROPERTY ADDRESS

2323 11th Avenue South

FILE NUMBER

BZZ-7816

LEGEND

○	Denotes iron monument set marked with P.L.S. No. 44900
●	Denotes found iron monument
BE	Denotes building entrance
BTL	Denotes beaver tail curb
CB	Denotes catch basin
CBX	Denotes communication box
CMH	Denotes communication manhole
DG	Denotes drain grate
DIP	Denotes ductile iron pipe
EB	Denotes electric box
EM	Denotes electric meter
FP	Denotes flag pole
G	Denotes gutter
GARB	Denotes garbage/refuse receptacle
GAS V	Denotes gas valve
GM	Denotes gas meter
GP	Denotes guard post
GRL	Denotes guard rail
HCR	Denotes handicap ramp
HCS	Denotes handicap sign
HYD	Denotes fire hydrant
INV	Denotes structure invert
LP	Denotes light pole
MG	Denotes metal grate
MH	Denotes manhole
OHE	Denotes overhead electric line
OHU	Denotes overhead utility line
(P)	Denotes per plan/not field verified
PKS	Denotes parking sign
PP	Denotes power pole
PPLP	Denotes power and light pole
PPU	Denotes power pole with underground utility
PVC	Denotes polyvinyl chloride pipe
RCP	Denotes reinforced concrete pipe
RD	Denotes roof drain
SANC	Denotes sanitary cleanout
SAN S	Denotes sanitary sewer
ST S	Denotes storm sewer
TCS	Denotes traffic control sign
TL	Denotes traffic light
TRANS	Denotes transformer box
UGC	Denotes underground communication line
UGE	Denotes underground electric line
W	Denotes water line
WMH	Denotes water manhole
EVG	Denotes evergreen tree
SHB	Denotes shrub
TR	Denotes deciduous tree

BENCH MARKS (BM)

NGVD 1929 Datum

1.) Top of top nut of fire hydrant at the southeast quadrant of 12th Avenue & 24th Street.
Elevation = 854.96 feet

2.) Top of top nut of fire hydrant at the southeast quadrant of 13th Avenue & 23rd Street.
Elevation = 853.73 feet

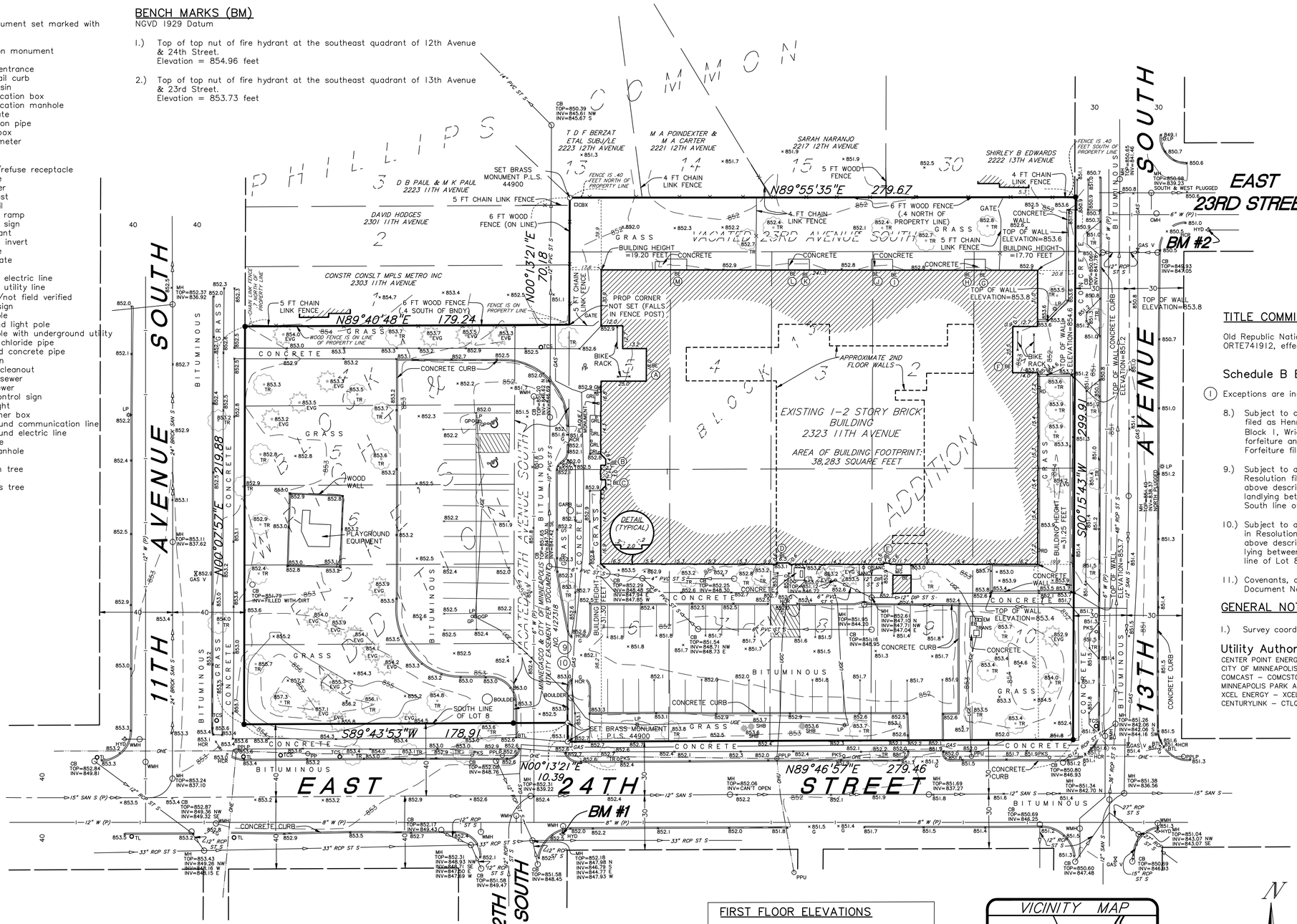

DESCRIPTION OF PROPERTY SURVEYED

(Per Old Republic National Title Insurance Company Commitment for Title Insurance Application No. ORTE741912, effective date March 16, 2015)

Lots 4 to 8 inclusive, Block 1, Wright & Fiskes Addition to Minneapolis, according to the recorded plat thereof, and situate in Hennepin County, Minnesota.

Lots 1 to 10 inclusive, Block 13, Eliot's Addition to Minneapolis, according to the recorded plat thereof, and situate in Hennepin County, Minnesota.

That part of vacated 12th Avenue South dedicated in Eliots Addition to Minneapolis as Holly Street lying between the extensions across it of the South line of Lot 3, Block 1 and the South line of said Block 1, Wright & Fiskes Addition to Minneapolis, That part of vacated 23rd Street dedicated in Eliots Addition to Minneapolis as Lime Street. lying between the extensions across it of the East and West lines of said Block 13 except the North 1/2 therof.

Torrens Property
Being registered land as is evidenced by Certificate of Title No. 703567

PLAT RECORDING INFORMATION

The plat of Wright & Fiskes Addition to Minneapolis was filed of record on March 7, 1876.

The plat of Eliot's Addition to Minneapolis was filed of record on May 29, 1857.

TITLE COMMITMENT

Old Republic National Title Insurance Company Commitment for Title Insurance Application No. ORTE741912, effective date March 16, 2015, was relied upon as to matters of record.

Schedule B Exceptions:

(1) Exceptions are indicated on survey with circled numbers where applicable.

8.) Subject to convenants, conditions and restrictions as contained in Section 3 of the deed filed as Hennepin County Recorder Document BNo. 4093292 as to Lots 4 to 8 inclusive, Block 1, Wright & Fiskes Addition to Minneapolis but free from the deed's provisions for forfeiture and right of recentry as shown by the Certificate of Completion and Release of Forfeiture files as Hennepin County Recorder Document No. 4860973.

9.) Subject to an easement for utility purposes in favor of Minnegasco, Inc., reserved in Resolution filed as Hennepin County Recorder Document No. 4127318 as to all of the above described part of vacated 12th Avenue South being a 30 foot wide strip of landlying between the South line of East 22nd Street and the Easterly extension of the South line of Lot 8, Block 1, Wright & Fiskes Addition.

10.) Subject to an easement for utility purposes in favor of the City of Minneapolis reserved in Resolution filed as Hennepin County Recorder Document No. 4127318 as to all of the above described part of vacated 12th Avenue South being a 30 foot wide strip ofland lying between the South line of East 22nd Street and the Easterly extension of the South line of Lot 8, Block 1, Wright & Fiskes Addition;

11.) Covenants, conditions and restrictions of that certain Declaration filed May 9, 2003 as Document No. 3734446.

GENERAL NOTES

1.) Survey coordinate basis: Hennepin County Corodinate Basis

Utility Authorities:

CENTER POINT ENERGY – MINGAS02	(612)–342–5200
CITY OF MINNEAPOLIS – CMINNE01	(612)–673–5600
COMCAST – COMCST03	(612)–522–8141
MINNEAPOLIS PARK AND REC – MPLSPK01	(612)–499–9090
XCEL ENERGY – XCEL07	(800)–848–7558
CENTURYLINK – CTLQL	(855)–742–6062

SURVEYOR'S CERTIFICATION

To: Minneapolis Park & Recreation Board & Old Republic National Title Insurance Company

This is to certify that this map or plat and the survey on which it is based were made in accordance with the 2011 Minimum Standard Detail Requirements for ALTA/ACSM Land Title Surveys, jointly established and adopted by ALTA and NSPS, and includes Items 1, 2, 4, 7(a), 7(b)(1), 8, 9, 11(b) and 13 of Table A thereof. The field work was completed on April 16th, 2015.

Dated this 16th day of October, 2015.

SUNDE LAND SURVEYING, LLC.

By: Arlee J. Carlson, P.L.S. Minn. Lic. No. 44900

ARLEE J. CARLSON REGISTERED LAND SURVEYOR 44900 STATE OF MINNESOTA

ZONING NOTES

1.) Zoning information obtained from the City of Minneapolis web site on April 13th, 2015.

The subject property is zoned R2B – Two–family District (low density).

2.) We have shown the current zoning classification of the property in the zoning notes section of the survey based on our own research; however, we have not included item 6(a) in the survey certification because zoning information has not been provided to us by the insurer as called for in the 2011 ALTA requirements.

3.) Parking: 66 Regular Spaces
2 Handicap Spaces
68 Total Spaces

AREA

Area = 123,331 square feet or 2.83 acres

UTILITY NOTES

1.) Utility information from plans and markings was combined with observed evidence of utilities to develop a view of the underground utilities shown hereon. However, lacking excavation, the exact location of underground features cannot be accurately, completely and reliably depicted. Where additional or more detailed information is required, excavation may be necessary.

2.) Other underground utilities of which we are unaware may exist. Verify all utilities critical to construction or design.

3.) Some underground utility locations are shown as marked onsite by those utility companies whose locators responded to our Gopher State One Call, ticket number 150902616.

4.) Contact GOPHER STATE ONE CALL at 651–454–0002 (800–252–1166) for precise onsite location of utilities prior to any excavation.

FIRST FLOOR ELEVATIONS

Entrances are indicated on survey with circled letters where applicable

ENTRANCE	ELEVATION	DESCRIPTION
A	853.17	TOP OF TILE
B	853.15	CONC OUTSIDE OF DOOR
C	853.10	CONC OUTSIDE OF DOOR
D	853.18	CONC OUTSIDE OF DOOR
E	853.17	CONC OUTSIDE OF DOOR
F	853.17	TOP OF LINOLEUM
G	853.16	CONC OUTSIDE OF DOOR
H	853.18	CONC OUTSIDE OF DOOR
I	853.18	CONC OUTSIDE OF DOOR
J	853.17	CONC OUTSIDE OF DOOR
K	853.19	CONC OUTSIDE OF DOOR
L	853.19	CONC OUTSIDE OF DOOR
M	853.17	CONC OUTSIDE OF DOOR

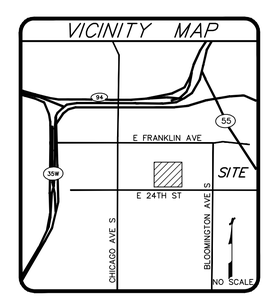

N

30 0 30 60
SCALE IN FEET

1 Add UGE and bldg area revised	JMD	10/16/2015
Revision	By	Date
Originally dated 4/21/2015		

Drawing Title:

ALTA / ACSM LAND TITLE SURVEY FOR: MINNEAPOLIS PARK & RECREATION BOARD PHILLIPS COMMUNITY CENTER

SUNDE LAND SURVEYING
www.sunde.com
Main Office:
9001 East Bloomington Freeway (35W) • Suite 118
Bloomington, Minnesota 55420–3435
952–881–2455 (Fax: 952–888–9526)
West Office:
Mandan, North Dakota 701–663–5562

Project: 2015–038	Bk/Pg: 857/55	Date: 04/21/2015
Township: 29 Range: 24 Section: 35		Sheet: 1 of 1
File: 2015038001–RI.dwg		

N:\2015\2015038\Dwg\2015038001-RI.dwg 10/16/2015 3:07:55 PM CDT

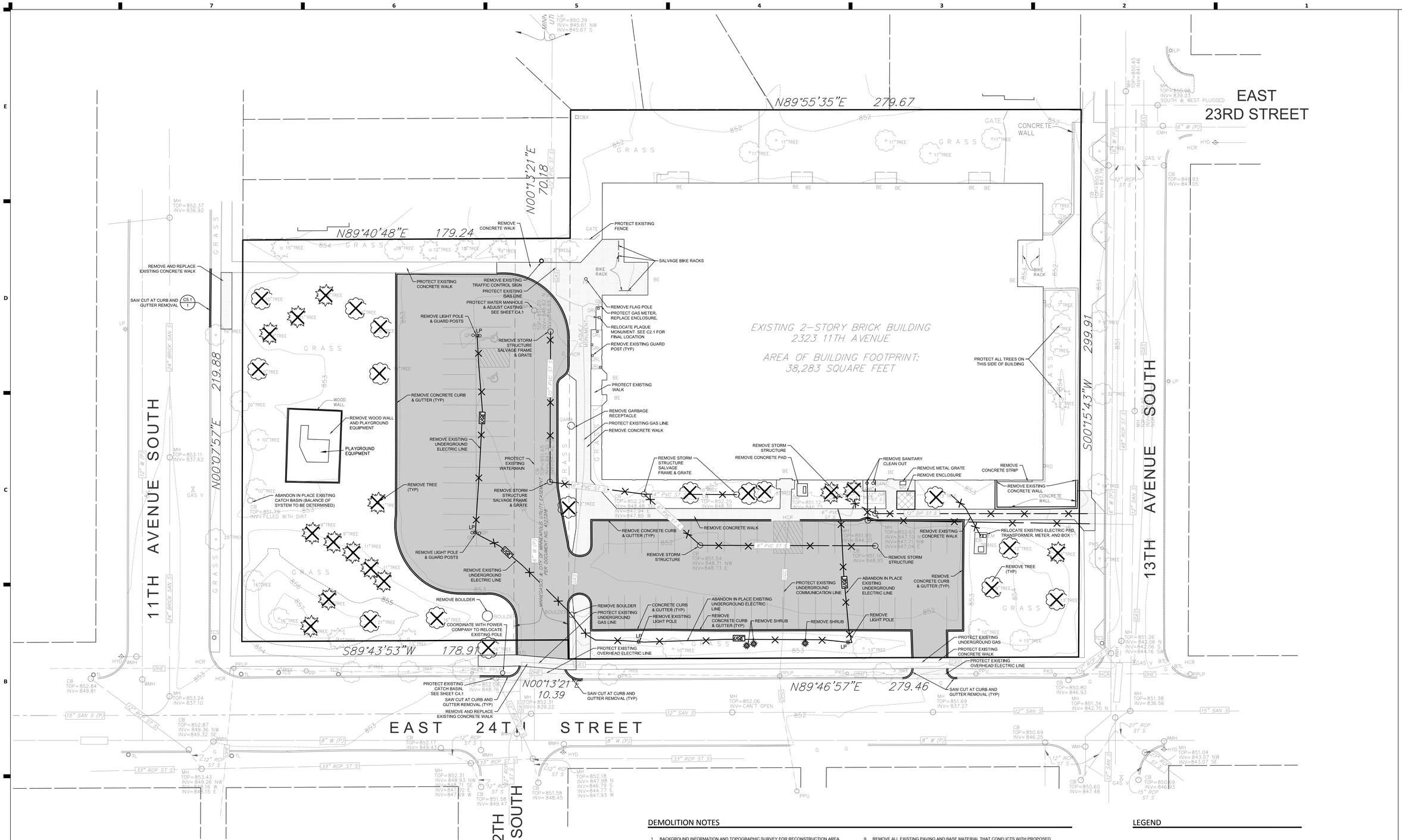

DEMOLITION NOTES

1. BACKGROUND INFORMATION AND TOPOGRAPHIC SURVEY FOR RECONSTRUCTION AREA PROVIDED BY SUNDE LAND SURVEYING, BLOOMINGTON, MINNESOTA ON AUGUST 3, 2015, EXPRESSLY FOR THIS PROJECT. ELAN DESIGN LAB CANNOT GUARANTY THE ACCURACY OR COMPLETENESS OF THIS INFORMATION. VERIFY ALL FIELD CONDITIONS AND UTILITY LOCATIONS PRIOR TO EXCAVATION/CONSTRUCTION. IF ANY DISCREPANCIES OR UNKNOWN UTILITIES ARE FOUND THAT IMPACT DESIGN OR IMPAIR CONSTRUCTION, THE ENGINEER AND OWNER SHOULD BE IMMEDIATELY NOTIFIED.

2. CONTRACTOR SHALL BRING ANY CHANGED OR UNFORESEEN CONDITIONS THAT COULD RESULT IN ADDITIONAL COST TO THE ATTENTION OF THE OWNER AND ENGINEER AS SOON AS THEY ARE DISCOVERED SO THAT THEY CAN BE PROPERLY DOCUMENTED. FAILURE TO NOTIFY OR COVERING UN-WITNESSED WORK SHALL RESULT IN REJECTION OF CLAIMS FOR ADDITIONAL COMPENSATION.

3. PROTECT ALL STRUCTURES AND LANDSCAPE NOT LABELED FOR DEMOLITION FROM DAMAGE DURING CONSTRUCTION. ANY ON-SITE OR OFF-SITE AREAS DISTURBED DIRECTLY OR INDIRECTLY DUE TO CONSTRUCTION SHALL BE RETURNED TO A CONDITION EQUAL TO OR BETTER THAN THE EXISTING CONDITION. CONTRACTOR IS SOLELY RESPONSIBLE FOR ANY CIVIL PENALTIES RESULTING FROM THEIR WORK UNDER THIS CONTRACT.

4. NO DEMOLITION MATERIALS SHALL BE DISPOSED OF ON-SITE. ALL DEBRIS SHALL BE HAULED OFF-SITE TO A DISPOSAL AREA APPROVED BY APPROPRIATE GOVERNMENTAL AUTHORITIES FOR THE HANDLING OF DEMOLITION DEBRIS. WORK SITE SHALL BE LEFT IN A CONDITION THAT MINIMIZES EROSION POTENTIAL ON A NIGHTLY BASE.

5. LIMIT CONSTRUCTION ACTIVITIES TO THE CONSTRUCTION LIMITS SHOWN ON THE PLAN. ALL CONSTRUCTION ACTIVITIES SHALL COMPLY WITH LOCAL ORDINANCES.

6. CONSTRUCTION ENTRANCE AND SILT FENCE SHALL BE IN PLACE AS SOON AS DEMOLITION OPERATIONS ALLOW. SEE SHEET C3.1 FOR ALL EROSION CONTROL MEASURES AND APPROPRIATE STAGING.

7. PROVIDE NECESSARY BARRICADES, SUFFICIENT LIGHTS, SIGNS AND OTHER TRAFFIC CONTROL METHODS AS MAY BE NECESSARY FOR THE PROTECTION AND SAFETY OF THE PUBLIC AND MAINTAIN THROUGHOUT THE LIFE OF THE PROJECT.

8. BUILDING DEMOLITION: REMOVE EXISTING STRUCTURE, COLUMNS, CANOPIES, FOOTINGS, FOUNDATIONS AND ANY ASSOCIATED CONSTRUCTION IN ITS ENTIRETY. EXISTING MATERIALS SHALL BE REMOVED FROM THE SITE IN ACCORDANCE WITH ALL LOCAL, COUNTY, STATE AND FEDERAL REQUIREMENTS. ABATEMENT OF ANY MATERIALS DETERMINED BY THE ENVIRONMENTAL ENGINEER TO BE HAZARDOUS SHALL BE REMOVED IN ACCORDANCE WITH APPROPRIATE REQUIREMENTS.

9. REMOVE ALL EXISTING PAVING AND BASE MATERIAL THAT CONFLICTS WITH PROPOSED PAVING, GRADING, STRUCTURES, ETC.

10. REMOVE ALL EXISTING SURFACE SITE FEATURES INCLUDING, BUT NOT LIMITED TO, CONCRETE AND BITUMINOUS PAVING, CONCRETE AND BITUMINOUS CURBING, WALKWAYS, FENCING, RETAINING WALLS, SCREEN WALLS, CONCRETE APRONS, SITE LIGHTING AND RELATED FOUNDATIONS, SITE SPECIFIC SIGNAGE AND RELATED FOUNDATIONS, BOLLARDS, LANDSCAPING, AND STAIRWAYS WITHIN THE CONSTRUCTION LIMITS UNLESS NOTED OTHERWISE.

11. COORDINATE WITH ALL PRIVATE UTILITY OWNERS FOR THE TERMINATION OF EXISTING ELECTRIC, TELEPHONE, CATV, ETC. SERVICES TO THE SITE. RE-USE OF ANY EXISTING SERVICES TO BE AT THE DISCRETION OF THE UTILITY OWNER.

12. RELOCATION OF UTILITY POLES SHALL BE COORDINATED WITH THE LOCAL UTILITY COMPANIES. ELECTRIC HANDHOLES, PULLBOXES, POWERPOLES, GUYLINES, AND STRUCTURES DISTURBED BY CONSTRUCTION ACTIVITIES TO BE RESTORED IN ACCORDANCE WITH SPECIFIC OWNER REQUIREMENTS.

13. CONTACT CENTER POINT ENERGY FOR CONNECTION OF GAS LINES.

14. AN OBSTRUCTION PERMIT IS REQUIRED ANYTIME CONSTRUCTION WORK IS PERFORMED IN THE PUBLIC RIGHT-OF-WAY. CONTACT SCOTT KRAMER AT (612) 673-2383 FOR DETAILS OF SIDEWALK AND LANE CLOSURES. A PERMIT AVAILABLE AT HTTP://MINNEAPOLIS.MN.ROWAY.NET/.

15. CONTACT ALLAN KLUGMAN AT (612) 673-2743 PRIOR TO CONSTRUCTION FOR THE TEMPORARY REMOVAL/TEMPORARY RELOCATION OF ANY CITY OF MINNEAPOLIS SIGNAL SYSTEM THAT MAY BE IN THE WAY OF CONSTRUCTION. ALL COSTS FOR RELOCATION AND/OR REPAIR OF CITY TRAFFIC FACILITIES SHALL BE BORNE BY THE CONTRACTOR AND/OR PROPERTY OWNER.

16. CONTACT DOUG MADAY AT (612) 673-5755 PRIOR TO CONSTRUCTION FOR THE REMOVAL OF ANY CITY OF MINNEAPOLIS RIGHT OF WAY SIGNS THAT MAY BE IN THE WAY OF CONSTRUCTION.

17. THE CONTRACTOR, PROPERTY OWNER OR RESPONSIBLE PARTY SHALL CONTACT MINNEAPOLIS SURFACE WATERS AND SEWERS 48 HOURS PRIOR TO ANY EXCAVATION OR CONSTRUCTION RELATED TO OR IN THE LOCATION OF THE PROPOSED STORMWATER MANAGEMENT BMP. CONTACT PAUL CHELLSEN, 673-2406 OR PAUL.CHELLSEN@MINNEAPOLISMN.GOV.

LEGEND

- REMOVE BITUMINOUS PAVEMENT
- REMOVE CONCRETE PAVEMENT
- REMOVE BUILDING
- REMOVE BITUMINOUS PAVEMENT
- REMOVE UTILITY
- REMOVE TREE SEE TREE PRESERVATION PLAN FOR REMOVAL INFORMATION

811 Know what's below. Call before you dig.

20 60 SCALE IN FEET

JLG architects
801 Washinton Ave. N. #120
Minneapolis, MN 55401
phone 612.746.4260
facsimile 612.746.4754
www.jlgarchitects.com

copyright © 2016

Élan DESIGN LAB
901 N 3rd STREET, SUITE 120
MINNEAPOLIS, MN 55401
p 612.260.7880
f 612.260.7890
www.elanlab.com

CERTIFICATION
I hereby certify that this plan, specification, or report was prepared by me or under my direct supervision, and that I am a duly Licensed Professional Engineer under the laws of the State of Minnesota.
Stephen N. Johnston
Registration Number
DATE 07/12/16

PRELIMINARY
NOT FOR CONSTRUCTION

REVISION SCHEDULE

NO.	DESCRIPTION	DATE

PHILLIPS COMMUNITY CENTER AQUATICS FACILITY

CLIENT
PHILLIPS COMMUNITY CENTER AQUATICS FACILITY
Minneapolis, MN

DATE 07/12/16

PHASE
PDR RESUBMITTAL

PROJECT 16076

SHEET
C101
DEMOLITION PLAN

6/13/2016 9:29:56 AM

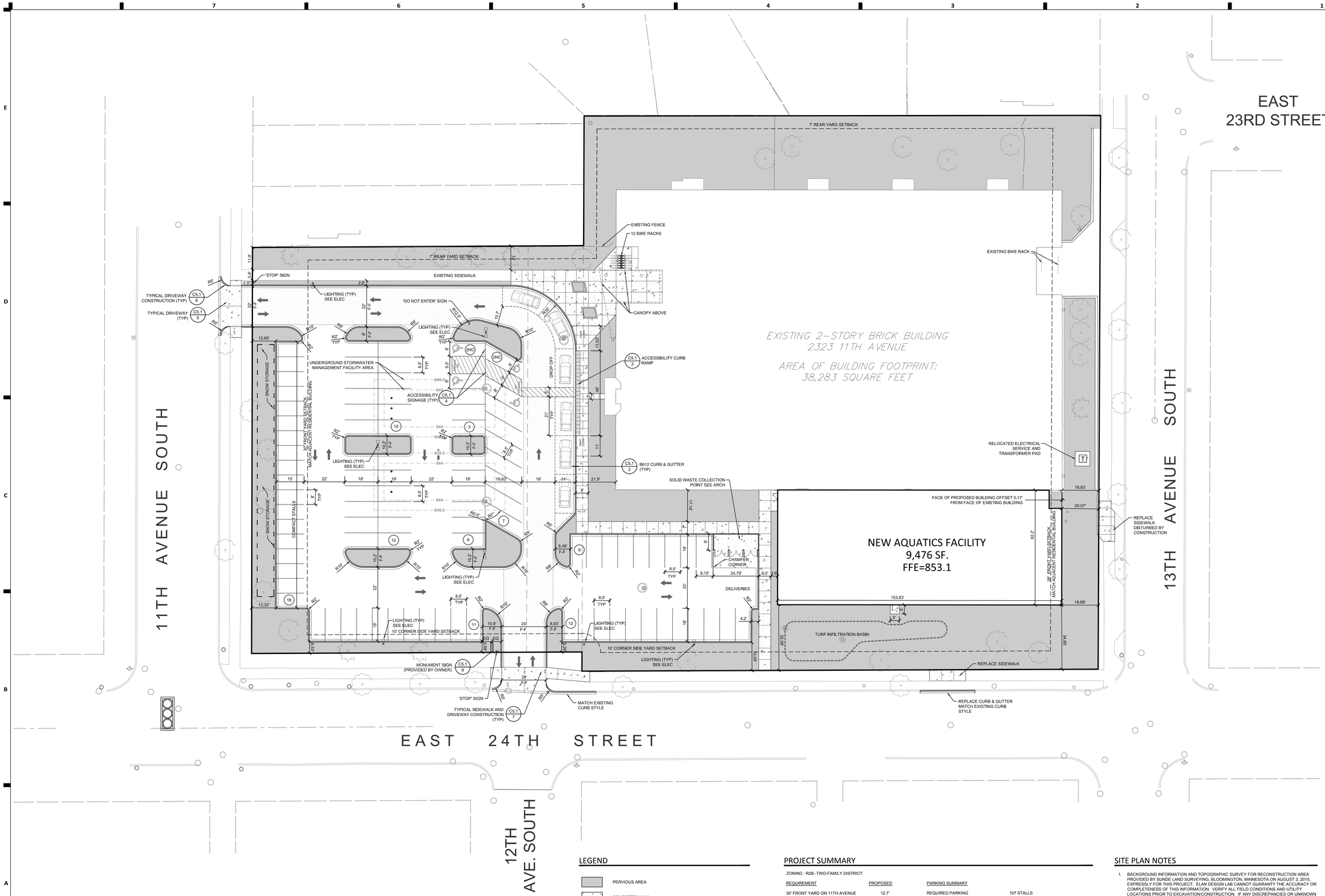

LEGEND

- PERVIOUS AREA
- CONCRETE WALK
- HEAVY DUTY BITUMINOUS PAVEMENT

PROJECT SUMMARY

ZONING : R2B -TWO-FAMILY DISTRICT

REQUIREMENT	PROPOSED
30' FRONT YARD ON 11TH AVENUE (MATCH ADJACENT RESIDENTIAL BUILDING)	12.7'
25' FRONT YARD ON 13TH AVENUE (MATCH ADJACENT RESIDENTIAL BUILDING)	20'
10' CORNER SIDE YARD ON 24TH STREET	5.3'
7' REAR YARD	12'

VARIANCES

1. SETBACK VARIANCE
   - BUILDING ADDITION
   - TRANSFORMER PAD
   - PARKING LOT
   - MONUMENT SIGN
2. PARKING STALLS
3. IMPERVIOUS COVERAGE

PARKING SUMMARY

REQUIRED PARKING (MAX. ALLOWABLE COMPACT STALL	107 STALLS 107 x 25% = 27 STALLS)
PROPOSED PARKING	94 STALLS
8'X18' ACCESSIBLE STALL	4 STALLS
8'X15' COMPACT STALL	18 STALLS
8.5'X18' STANDARD STALL	72 STALLS
REQUIRED BICYCLE	12 SPACES
PROPOSED BICYCLE	12 SPACES

AREA SUMMARY

SITE 123,331 SF. (2.83 AC.)	
IMPERVIOUS (60% MAX. ALLOWABLE)	89,421 SF. (73%)
BUILDING COVERAGE (45% MAX. ALLOWABLE)	47,759 SF. (39%)
EXISTING	38,283 SF.
PROPOSED ADDITION	9,476 SF.
PARKING, WALK, & TRASH	41,662 SF. (34%)
PERVIOUS AREA	33,910 SF. (27%)
AREAS NOT OCCUPIED BY BUILDINGS (REQUIRED LANDSCAPE YARD 20% MIN.	75,572 SF. OF AREA NOT OCCUPIED BY BUILDING)
PROPOSED LANDSCAPE YARD	33,910 SF. (45%)

SITE PLAN NOTES

1. BACKGROUND INFORMATION AND TOPOGRAPHIC SURVEY FOR RECONSTRUCTION AREA PROVIDED BY SUNDE LAND SURVEYING, BLOOMINGTON, MINNESOTA ON AUGUST 3, 2015, EXPRESSLY FOR THIS PROJECT. ELAN DESIGN LAB CANNOT GUARANTY THE ACCURACY OR COMPLETENESS OF THIS INFORMATION. VERIFY ALL FIELD CONDITIONS AND UTILITY LOCATIONS PRIOR TO EXCAVATION/CONSTRUCTION. IF ANY DISCREPANCIES OR UNKNOWN UTILITIES ARE FOUND THAT IMPACT DESIGN OR IMPAIR CONSTRUCTION, THE ENGINEER AND OWNER SHOULD BE IMMEDIATELY NOTIFIED.
2. DIMENSIONS SHOWN ON THIS PLAN ARE TO FACE OF CURB AND EXTERIOR FACE OF BUILDING UNLESS NOTED OTHERWISE.
3. MEET AND MATCH EXISTING CONDITIONS. PROVIDE TRANSITION AS NECESSARY.
4. ON-SITE CURB TO BE B612 STANDARD CONCRETE CURB & GUTTER. MATCH EXISTING CURB ON CITY STREETS.
5. ACCESSIBLE AISLE TO BE YELLOW DIAGONAL PAINT STRIPING WITH 'NO PARKING' MARKED. ACCESSIBLE PARKING STALL SYMBOL TO BE BLUE.
6. STREET LIGHTING INSTALLED AS PART OF THE PROJECT SHALL BE INSPECTED BY THE CITY. CONTRACTORS SHALL ARRANGE FOR INSPECTIONS WITH THE TRAFFIC DEPARTMENT. CONTACT DAVE PREHALL AT (612) 673-5759 FOR FURTHER INFORMATION. ANY LIGHTING INSTALLATIONS NOT MEETING CITY SPECIFICATIONS WILL BE REQUIRED TO BE REINSTALLED AT CONTRACTOR EXPENSE.
8. NO CONSTRUCTION, DEMOLITION OR COMMERCIAL POWER MAINTENANCE EQUIPMENT SHALL BE OPERATED WITHIN THE CITY BETWEEN THE HOURS OF 6:00 P.M. AND 7:00 A.M. ON WEEKDAYS OR DURING ANY HOURS ON SATURDAYS, SUNDAYS AND STATE AND FEDERAL HOLIDAYS, EXCEPT UNDER PERMIT. CONTACT ENVIRONMENTAL SERVICES AT 612-673-3867 FOR PERMIT INFORMATION.

Know what's below. Call before you dig.

20 60
SCALE IN FEET

JLG architects
801 Washinton Ave. N. #120
Minneapolis, MN 55401
phone 612.746.4260
facsimile 612.746.4754
www.jlgarchitects.com
copyright © 2016

Élan DESIGN LAB
901 N 3rd STREET, SUITE 120
MINNEAPOLIS, MN 55401
p 612.260.7980
f 612.260.7990
www.elanlab.com

CERTIFICATION
I hereby certify that this plan was prepared by me, or under my direct supervision and that I am a duly licensed Professional Engineer under the laws of the State of Minnesota.
Stephen M. Johnson
Registration Number 18004
DATE 07/12/16

PRELIMINARY
NOT FOR CONSTRUCTION

REVISION SCHEDULE

NO.	DESCRIPTION	DATE

PHILLIPS COMMUNITY CENTER AQUATICS FACILITY

CLIENT
Minneapolis, MN

DATE
07/12/16

PHASE
PDR RESUBMITTAL

PROJECT
16076

SHEET
C201
SITE PLAN

6/13/2016 9:29:56 AM

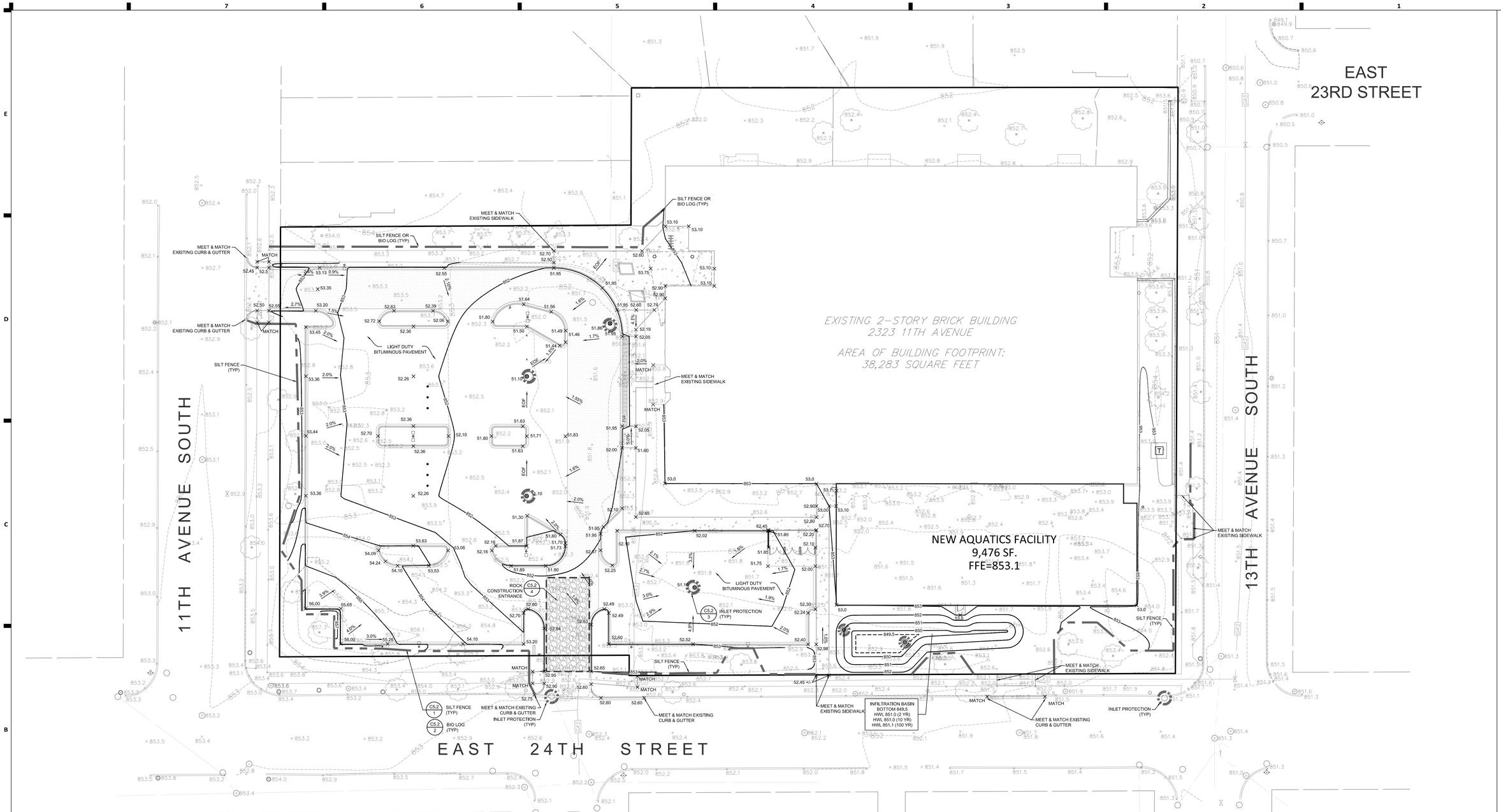

LEGEND

- SILT FENCE OR BIO-LOG (SILT FENCE MUST BE USED WHERE TREE PROTECTION IS REQUIRED.)
- STORM STRUCTURE PROTECTION
- HEAVY DUTY BITUMINOUS PAVEMENT
- ROCK CONSTRUCTION ENTRANCE

DISTURBED AREA SUMMARY

TOTAL DISTURBED AREA	65,175 SF.
EXISTING IMPERVIOUS WITHIN DISTURBED AREA	37,165 SF.
PROPOSED IMPERVIOUS WITHIN DISTURBED AREA	49,845 SF.

NPDES AREA SUMMARY

	EXISTING	PROPOSED
IMPERVIOUS		
BUILDING	0.879 ACRES	1.096 ACRES
PAVEMENT	0.874 ACRES	0.957 ACRES
TOTAL IMPV	1.753 ACRES	2.053 ACRES
PERVIOUS	1.078 ACRES	0.778 ACRES
TOTAL	2.831 ACRES	2.831 ACRES

SURFACE INFILTRATION BASIN CONSTRUCTION NOTES

1. DO NOT EXCAVATE INFILTRATION BASIN UNTIL BUILDING AND PARKING LOT CONSTRUCTION IS COMPLETE.
2. REMOVE EXISTING FILL SOIL TO EXPOSE UNDERLYING SM, SP, OR SP-SM SOIL IF NECESSARY FILL. TO PROPOSED GRADE MINUS 0.25 FEET WITH SP SOIL.
3. FILL REMAINING 0.25 FEET WITH A MIXTURE OF SANDY LOAM AND COMPOST 50%/50%.
4. VERIFY MINIMUM INFILTRATION RATE OF 0.45 INCHES PER HOUR WITH DOUBLE RING INFILTROMETER.
5. INSTALL SOD PER PLAN.
6. SEE SHEET C4.1 FOR UNDERGROUND BASIN NOTES.

GRADING NOTES

1. BACKGROUND INFORMATION AND TOPOGRAPHIC SURVEY FOR RECONSTRUCTION AREA PROVIDED BY SUNDE LAND SURVEYING, BLOOMINGTON, MINNESOTA ON AUGUST 3, 2015, EXPRESSLY FOR THIS PROJECT. ELAN DESIGN LAB CANNOT GUARANTY THE ACCURACY OR COMPLETENESS OF THIS INFORMATION. VERIFY ALL FIELD CONDITIONS AND UTILITY LOCATIONS PRIOR TO EXCAVATION/CONSTRUCTION. IF ANY DISCREPANCIES OR UNKNOWN UTILITIES ARE FOUND THAT IMPACT DESIGN OR IMPAIR CONSTRUCTION, THE ENGINEER AND OWNER SHOULD BE IMMEDIATELY NOTIFIED.
2. VERIFY ALL FIELD CONDITIONS AND UTILITY LOCATIONS PRIOR TO EXCAVATION/CONSTRUCTION. IF ANY DISCREPANCIES OR UNKNOWN UTILITIES ARE FOUND THAT IMPACT DESIGN OR IMPAIR CONSTRUCTION, THE ENGINEER AND OWNER SHOULD BE IMMEDIATELY NOTIFIED.
3. ALL WORK TO COMPLY WITH CURRENT MINNESOTA DEPARTMENT OF TRANSPORTATION (MNDOT) STANDARD SPECIFICATIONS FOR CONSTRUCTION UNLESS NOTED.
4. FOLLOW ALL RECOMMENDATIONS PRESENTED IN GEOTECHNICAL EVALUATION REPORT PREPARED BY BRAUN INTERTEC CORPORATION DATED OCTOBER 23, 2015.
5. ALL UNDOCUMENTED FILL, AND TOPSOIL SHALL BE REMOVED FROM WITHIN THE PROPOSED BUILDING PAD. A GEOTECHNICAL ENGINEER OR THEIR DESIGNATED REPRESENTATIVE SHALL OBSERVE THE PROJECT EXCAVATIONS TO VERIFY THAT UNSUITABLE MATERIALS HAVE BEEN PROPERLY REMOVED FROM PROPOSED STRUCTURAL AREAS, THAT ADEQUATE BEARING SUPPORT IS PROVIDED BY THE EXPOSED SOILS AND THAT STRUCTURAL FILL IS PLACED APPROPRIATELY. THE EXPOSED SOIL AT THE BASE OF FOOTINGS SHALL BE COMPACTED TO 98 PERCENT PROCTOR DRY DENSITY (ASTM D698).
6. ON-SITE NON-ORGANIC SOIL IS GENERALLY SUITABLE FOR STRUCTURAL FILL. SILTY OR ORGANIC SOILS SHALL NOT BE USED FOR STRUCTURAL FILL. PLACEMENT OF STRUCTURAL FILL SHALL BE OBSERVED AND TESTED BY AN EXPERIENCED TECHNICIAN OR ENGINEER TO VERIFY THAT PROPER COMPACTION HAS BEEN ACHIEVED. STRUCTURAL FILL SHALL BE MOISTURE CONDITIONED (DRIED OR WETTED) AS APPROPRIATE PRIOR TO PLACEMENT. MOISTURE CONDITIONED ENGINEERED FILL SHALL BE PLACED AND COMPACTED IN LOOSE LIFTS OF 8 INCHES OR LESS. EACH LIFT OF FILL SHOULD BE COMPACTED BY LARGE VIBRATORY EQUIPMENT UNTIL THE IN-PLACE SOIL DENSITY IS EQUAL TO OR GREATER THAN THE CRITERIA ESTABLISHED WITHIN THE FOLLOWING TABULATION.

TYPE OF CONSTRUCTION	COMPACTION CRITERIA (% RESPECTIVE PROCTOR)	MOISTURE CONTENT (VARIANCE FROM OPTIMUM)
NON-ENGINEERED FILL (GREEN SPACE)	90	+/- 5%
ENGINEERED FILL BELOW FOUNDATIONS	98	+/- 3%
ENGINEERED FILL BELOW FLOOR SLABS	98	+/- 3%
AGGREGATE BASE	100	+/- 1%
WITHIN 3' OF PAVEMENT SUBGRADE	100	+/- 1%
BELOW 3' OF PAVEMENT SUBGRADE	90	+/- 3%

7. SIDEWALLS SHALL BE BENCHED OR SLOPED TO PROVIDE SAFE WORKING CONDITIONS AND STABILITY FOR ENGINEERED FILL PLACEMENT. THE CONTRACTOR IS SOLELY RESPONSIBLE FOR ASSESSING THE STABILITY OF AND EXECUTING PROJECT EXCAVATIONS USING SAFE METHODS. THE CONTRACTOR IS ALSO RESPONSIBLE FOR NAMING THE "COMPETENT INDIVIDUAL" AS PER SUBPART P OF 29 CFR 1926.6 (FEDERAL REGISTER - OSHA). IF SOIL CORRECTION IS REQUIRED IT SHALL EXTEND 3 FEET OUTSIDE OF THE PAVEMENT OR BUILDING LIMITS PLUS ONE FOOT HORIZONTAL FOR EVERY VERTICAL FOOT OF CORRECTION.
8. THE CONTRACTOR SHALL PROTECT THE SUBGRADE FROM INCLEMENT WEATHER TO MAINTAIN STABILITY. FOLLOWING REMOVAL OF TOPSOIL, PAVEMENT, AND ANY UNSUITABLE SOILS, THE RESULTING SUBGRADE SHOULD BE SCARIFIED AND RE-COMPACTED TO A DEPTH OF 12 INCHES. A PROOFROLL TEST SHOULD THEN BE PERFORMED TO DETERMINE SOFT OR UNSTABLE SUBGRADE AREAS. IF RUTTING OR LOCALIZED UNSTABLE SUBGRADE AREAS ARE OBSERVED, THOSE AREAS SHOULD BE SUBCUT, MOISTURE-CONDITIONED, AND RE-COMPACTED OR REMOVED TO A STABLE DEPTH. THE PROOF ROLL SHOULD BE PERFORMED WITH A TANDEM AXLE DUMP TRUCK LOADED TO GROSS CAPACITY (AT LEAST 20 TONS). ACCEPTANCE CRITERIA OF THE PROOF ROLL SHALL BE LIMITED TO RUT FORMATION NO MORE THAN ONE INCH (1") DEPTH (FRONT OR REAR AXLES) AND NO PUMPING (ROLLING) OBSERVED DURING THE VISUAL INSPECTION. PROOF ROLL TESTS SHOULD BE OBSERVED BY AN EXPERIENCED TECHNICIAN OR ENGINEER PRIOR TO PLACEMENT OF THE AGGREGATE BASE COURSE TO VERIFY THE SUBGRADE WILL PROVIDE ADEQUATE PAVEMENT SUPPORT.
9. PAVEMENT

HEAVY DUTY BITUMINOUS PAVEMENT
2.0" BITUMINOUS WEAR (MNDOT 2360 TYPE 9.5
WEARING COURSE MIXTURE (2,B) SPWEA340B)
TACK COAT (MNDOT 2357)
2.0" BITUMINOUS NON-WEAR (MNDOT 2360 TYPE 12.5
NON-WEARING COURSE MIXTURE (2,B) SPNWB330B)
8" AGGREGATE BASE (MNDOT 3138 CL5, CL6, OR CL7C)
COMPACTED SUBGRADE

BITUMINOUS PAVEMENT
1.5" BITUMINOUS WEAR (MNDOT 2360 TYPE 9.5
WEARING COURSE MIXTURE (2,B) SPWEA340B)
TACK COAT (MNDOT 2357)
2.0" BITUMINOUS NON-WEAR (MNDOT 2360 TYPE 12.5
NON-WEARING COURSE MIXTURE (2,B) SPNWB330B)
8" AGGREGATE BASE (MNDOT 3138 CL5, CL6, OR CL7C)
COMPACTED SUBGRADE

CONCRETE PAVEMENT
8.0" CONCRETE (SEE BELOW)
6" AGGREGATE BASE (MNDOT 3138 CL5, CL6, OR CL7C)
COMPACTED SUBGRADE
#4 BAR 24" O.C. BOTH DIRECTIONS (MNDOT 3301)

CONCRETE WALKWAYS
4.0" CONCRETE (SEE BELOW)
4" AGGREGATE BASE (MNDOT 3138 CL5, CL6, OR CL7C)
COMPACTED SUBGRADE

CONCRETE MIX NO. 3A32 MNDOT 2461.3 SHALL BE USED FOR HAND PLACED FORMED CURB AND GUTTER, MEDIANS, DRIVEWAYS, CROSS GUTTERS, SIDEWALKS, PEDESTRIAN RAMPS AND MEDIANS. CONCRETE MIX NO. 3A22, MNDOT SPECIFICATION 2461.3 SHALL BE USED FOR AN EXTRUSION MACHINE PLACEMENT OF CONCRETE. IN THE PRODUCTION OF CONCRETE, AN AIR ENTRAINING AGENT SHALL BE ADDED TO THE MIX ACCORDING TO MNDOT 2461.4.

10. FORM COATING MATERIAL SHALL MEET MNDOT 3902.
11. CONCRETE INSTALLATION SHALL CONFORM WITH MNDOT 2531.
12. SITE CONCRETE FINISHING - CONCRETE SHALL BE STRUCK TRUE TO CROSS SECTION AS SHOWN ON THE PLANS. NO ADDITIONAL WATER MAY BE ADDED TO AID IN THE FINISHING PROCESS. A LIGHT BROOM FINISH WILL BE REQUIRED AT RIGHT ANGLES TO THE CENTER LINE ON ALL CONCRETE WORK UNLESS DIRECTED OTHERWISE. ALL EXPOSED EDGES AND JOINTS IN CURB,GUTTER, SIDEWALK AND STEPS SHALL BE ROUNDED WITH A SUITABLE EDGING TOOL. BEFORE FINAL FINISHING, THE CONTRACTOR SHALL CHECK THE CONCRETE WITH A TEN (10) FOOT STEEL STRAIGHT EDGE TO ENSURE THERE IS NO VARIATION GREATER THAN 3/16"FROM THE STRAIGHT EDGE ON TANGENT LINES OR GRADES. IF DEVIATIONS GREATER THAN 3/16" ARE FOUND THE WORK WILL BE CONSIDERED AS UNACCEPTABLE AND WILL BE REQUIRED TO BE REMOVED AND REPLACED AT NO EXPENSE TO THE OWNER.
13. CONCRETE CURING SHALL BE PERFORMED BY APPLYING A MEMBRANE CURING COMPOUND (TYPE 2, WHITE PIGMENTED, MNDOT 3754) TO THE EXPOSED SURFACE OF THE CONCRETE WITHIN ONE (1)HOUR AFTER FINISHING THE CONCRETE SURFACES. WHEN THE FORMS ARE REMOVED IN LESS THAN 72 HOURS AFTER PLACING THE CONCRETE, THE CURING COMPOUND SHALL BE APPLIED IMMEDIATELY TO THE EXPOSED SURFACES, OR THE TRENCHES SHALL BE BACKFILLED IMMEDIATELY WITH SUITABLE BACKFILL MATERIAL. THE RATE OF APPLICATION OF CURING COMPOUND SHALL BE 150 SQUARE FEET PER GALLON. THE COMPOUND SHALL APPEAR AS WHITE AS A SHEET OF PAPER AFTER APPLICATION ON THE CONCRETE SURFACE.
14. PREFORMED EXPANSION JOINTS SHALL MEET MNDOT 3702, AND SHALL BE PROVIDED AT THE FOLLOWING LOCATIONS: AT THE BEGINNING AND END OF ALL CURB AND GUTTER RADII. WHERE NEW CONCRETE SURROUNDS, ADJOINS, OR ABUTS ANY EXISTING FIXED OBJECTS SUCH AS FIRE HYDRANTS, BUILDING FOUNDATIONS, CONCRETE DRIVEWAYS, SIDEWALKS, AND OTHER RIGID STRUCTURES. AFTER EACH LOAD OF CONCRETE WHEN PLACING CURB AND EVERY 100 FEET WHEN PLACING SIDEWALK. CONTRACTION JOINTS WILL NOT BE SEALED BUT WILL BE REQUIRED AT A SPACING OF 10 FEET ON CURB AND GUTTER AND ON SIDEWALK CONSTRUCTION AS SHOWN ON THE PLAN. CONTRACTION JOINTS WILL BE CUT TO A DEPTH 1/3 THE THICKNESS OF THE CONCRETE, SURFACE AND BACK OF ALL CURBS. CONTRACTION JOINTS SHALL BE PLACED SO THAT NO SLAB IS LARGER THAN 100 SQUARE FEET IN AREA. THE CONTRACTOR IS RESPONSIBLE FOR CONSTRUCTING CONTRACTION JOINTS THAT PREVENT CONCRETE FROM CRACKING AT OTHER LOCATIONS.
15. CONCRETE TESTING INCLUDING SLUMP, AIR ENTRAINMENT, TEMPERATURE AND COMPRESSIVE STRENGTH SHALL BE PERFORMED ON THE FIRST LOAD OF THE DAY FOR ALL CONCRETE POURS OF AT LEAST 4 CUBIC YARDS. AN ADDITIONAL TEST SHALL BE PERFORMED FOR EACH 100 CUBIC YARDS OR PORTION THEREOF.
16. AGGREGATE BASE FINAL SHAPING AND COMPACTION OF THE AGGREGATE BASE SHALL BE DONE JUST PRIOR TO CONSTRUCTION OF THE PLANT MIX BITUMINOUS SURFACE. THE FINISHED SURFACE OF THE BASE SHALL SHOW NO VARIATION GREATER THAN 1/2 INCH FROM A TEN (10) FOOT STRAIGHT EDGE.
17. PLANT MIXED BITUMINOUS MIXTURE SHALL BE SPREAD WITHOUT SEGREGATION, AT THE SPECIFIED RATE TO THE CROSS SECTION SHOWN IN THE PLANS AND PER MNDOT 3151.
18. THE THICKNESS OF EACH BITUMINOUS COURSE SHALL BE WITHIN 1/4 INCH OF THE THICKNESS AS SHOWN ON THE PLANS. THE TOTAL THICKNESS OF ALL BITUMINOUS COURSES SHALL BE WITHIN 1/2 INCH.
19. ADJUST ALL SURFACE COURSES TO NOT GREATER THAN ¼" ABOVE ADJACENT CURB FRONT EDGES WHERE WATER FLOWS TO CURB, AND FLUSH WHERE WATER FLOWS AWAY FROM CURB, OR ½" ABOVE MANHOLE FRAMES, VALVE BOXES OR OTHER FIXED STRUCTURES.
20. PRIOR TO CONSTRUCTING THE BITUMINOUS BINDER AND/OR WEARING COURSES, THE CONTRACTOR SHALL SWEEP THE PARKING LOT, THE SWEEPER SHALL BE A SELF-PROPELLED PICK-UP (WITH WATER) SWEEPER. A SIDE-THROW SWEEPER WILL NOT BE ALLOWED.
21. TACK COAT SHALL CONFORM TO MNDOT 2357.2.A.
22. BITUMINOUS PAVEMENTS SHALL BE COMPACTED TO 92% OF THE MAXIMUM THEORETICAL DENSITY. THE OWNER MAY AT THEIR OPTION PERFORM AGGREGATE AND BITUMINOUS TESTING. THE COST OF ALL FAILING TESTS MAY BE BACK-CHARGED TO THE CONTRACTOR.
23. PERMITS AND APPROVAL ARE REQUIRED FROM ENVIRONMENTAL SERVICES FOR THE FOLLOWING ACTIVITIES: TEMPORARY STORAGE OF IMPACTED SOILS ON SITE PRIOR TO DISPOSAL OR REUSE; REUSE OF IMPACTED SOILS ON SITE; DEWATERING AND DISCHARGE OF ACCUMULATED STORM WATER OR GROUND WATER, UNDERGROUND OR ABOVEGROUND TANK INSTALLATION OR REMOVAL, WELL CONSTRUCTION OR SEALING. CONTACT TOM FRAME AT 612-673-5807 FOR PERMIT APPLICATIONS AND APPROVALS.

Know what's below. Call before you dig.

20 60
SCALE IN FEET

JLG architects
801 Washinton Ave. N. #120
Minneapolis, MN 55401
phone 612.746.4260
facsimile 612.746.4754
www.jlgarchitects.com
copyright © 2016

Élan DESIGN LAB
901 N 3rd STREET, SUITE 120
MINNEAPOLIS, MN 55401
p 612.260.7980
f 612.260.7980
www.elanlab.com

CERTIFICATION
I hereby certify that this plan, specification, or report was prepared by me or under my direct supervision and that I am a duly Licensed Professional Engineer under the laws of the State of Minnesota.
Stephen N. Johnston
Registration Number 43603
DATE 07/12/16

PRELIMINARY
NOT FOR CONSTRUCTION

REVISION SCHEDULE

NO.	DESCRIPTION	DATE

PHILLIPS COMMUNITY CENTER AQUATICS FACILITY

CLIENT
Minneapolis, MN

DATE 07/12/16
PHASE PDR RESUBMITTAL
PROJECT 16076
SHEET C301
GRADING & EROSION CONTROL PLAN

6/13/2016 9:26:56 AM

Project Name / Location

Project Name	Phillips Community Center
Project Address	2323 11th Avenue South Minneapolis, MN 55404
Property ID	
Latitude / Longitude	44.9596, 93.2573
Project Type	Public Building

Contacts

Owner	Contractor (Operator)	Preparer
Minneapolis Parks and Recreation Board	TBD	Steve Johnston, PE
		Élan Design Lab, Inc.
2117 West River Rd. N		901 N 3rd St. #120
Minneapolis, MN 55411		Minneapolis, MN 55401
612-230-6400		612-260-7982
		sjohnston@elanlab.com

General SWPPP Responsibilities

The Contractor (Operator) shall provide a knowledgeable and experienced person(s) to oversee the implementation of the SWPPP and the installation, Inspection and maintenance of the erosion and sediment control BMP's before and during construction. Training must be in conformance with the NPDES Construction Permit requirements. Training documentation must kept on-site with the SWPPP and the trained person must be available on-site within 72 hours.

Both the Owner and Contractor (Operator) shall be responsible for the proper termination and/or transfer of the permit.

The Owner will be responsible for the long term operation and maintenance of the permanent storm water management system(s).

Unless specifically stated the engineer shall have no responsibility for any SWPPP activities during or after construction.

Project Description

The project consists of an8,566 ft^2 addition to the existing recreation center building, along with the reconstruction and additions to the existing parking lot.

Soils

The project site has been previously mass graded. Geotechnical borings indicate that the predominant soils are classified as SP, SM and SP-SM

Receiving Waters

The site is located in an urban area. There are no natural water bodies within a mile of the site.

Project Plans

The following plan sheets are hereby incorporated into this SWPPP. Any subsequent revisions are also incorporated.

Sheet Number	Description	Date
C3.1	Grading and Erosion Control Plan	07/12/2016
C4.1	Utility Plan	07/12/2016
C5.2	Details	07/12/2016

Related Reviews and Permits

Agency	Type of Permit or Review	Status
City of Minneapolis	Site Plan	Pending
MPCA		Pending

Stormwater Management System Overview

The building addition and plaza area drain to a surface infiltration basin. The balance of the parking lot and disturbed area drain to an underground infiltration / rate control basin, before leaving the site via an existing 12" PVC

Erosion Prevention Measures - General

The Contractor (Operator) is responsible for all erosion prevention measures for the project including but are not limited to the following:

1. The Contractor (Operator) shall plan and implement appropriate construction practice and construction phasing to minimize erosion and retain vegetation whenever possible
2. All areas not to be disturbed shall be delineated with flags, stakes, signs, or other means necessary to protect these areas before construction begins on the site.
3. All drainage ditches and/or swales shall have temporary or permanent stabilization within 24 hours of connecting to a surface water or 72 hours after construction activity in the ditch/swale has temporarily or permanently ceased.
4. All exposed soils shall be stabilized as soon as possible to limit soil erosion. In no case shall un-worked areas, including stock piles, have exposed soils for more than 14 days with providing temporary or permanent stabilization.

Sediment Control Measures and Timing - General

The Operator (Contractor) is responsible for all sediment control measures for the project. Sediment control measures include but are not limited to the following:

1. Sediment control measures shall be established on all down gradient perimeters before any up-gradient land disturbing activities begin. These measures shall remain in place until final stabilization has been established.
2. On slopes with 3:1 or steeper grades there shall be no unbroken slope length greater than 75 feet.
3. All storm drain inlets and culvert inlets shall be protected by an appropriate BMP during construction until all sources with potential for discharging to the inlet has been stabilized. Inlet and culvert protection shall conform to the MnDOT Specifications 2573 and 3891.
4. Stock piles shall be provided with an effective sediment perimeter control and shall not be placed in any type of surface water or drainageway.
5. Vehicle tracking shall be minimized with effective BMP's. Where the BMP's fail to prevent sediment from tracking onto streets the Contractor shall conduct street sweeping to remove all tracked sediment.
6. The Operator is responsible for identifying the need for temporary sediment basins based on actual field conditions to protect downstream resources. Temporary sediment basins shall be constructed concurrently with up gradient vegetation disturbance and maintained until the risk of damage to downstream resources is mitigated by other means.

Dewatering and Basin Draining Activities - General

The Operator is responsible for adhering to all dewatering and surface drainage regulations, including but not limited to the following:

1. Whenever possible water from dewatering activities shall discharge to a temporary and/or permanent sediment basin.
2. If water cannot be discharged to a sedimentation basin, it shall be treated with other appropriate BMP's, to effectively remove sediment.
3. All discharge points shall be protected from erosion and scour.
4. Discharge water shall be dispersed over an effective energy dissipation measure.
5. All water from dewatering shall be discharged in a manner than does not cause nuisance conditions, erosion, or inundation of wetlands. Water shall not be discharged to adjacent residential properties. It must be discharged to the public street.

Final Stabilization - General

The Operator is responsible for ensuring final stabilization of the site, including but is not limited to the following:

1. All soil disturbing activities have been completed.
2. All exposed soils have been uniformly stabilized with at least 80% vegetation coverage.
3. All drainage ditches, ponds and all storm water conveyance systems have been cleared of sediment and stabilized to preclude erosion.
4. All temporary BMP's have been removed and properly disposed.
5. Final stabilization shall be performed in accordance with MnDOT Specification 2515.

Temporary Sediment Basin

Given the limited site area a temporary sediment basin is not proposed. The Operator shall evaluate the need for additional sediment control at each stage of construction and take all steps necessary to protect adjacent properties and resources.

Construction Sequencing

Contractor shall comply with the following sequence. The Contractor may make adjustments to the sequence if needed to address actual field conditions.

1. Install perimeter silt fence as shown on the erosion control plan. Bio-logs may be used instead of silt fence at the Contractors discretion.
2. Install rock construction entrance. Location may be adjusted in the field based on direction from Owner.
3. Install inlet control devices.
4. Strip topsoil from building addition, salvaging the best quality for reuse.
5. Excavate for building foundation and pool. Excavated material to be removed from the site or stockpiled. Stockpiles may not be located in conveyance routes or street.
6. Install and backfill foundation. Complete rough grading, while preserving topsoil for final grading.
7. Complete building.
8. Remove existing pavement, grade site.
9. Install underground infiltration basin and other storm sewer facilities.
10. Install curb and pave first lift of parking lot.
11. Install trees, shrubs, and other landscape materials.
12. Excavate surface infiltration basin.
13. Sod site.
14. Remove silt fence and bio logs just prior to sodding all remaining disturbed areas.
15. Monitor vegetation and reinstall as needed until fully established.

Inspection and maintenance

The Contractor (Operator) is responsible for completing required inspections maintenance and observation of weather conditions and rainfall amounts to ensure compliance with the permit requirements. The Contractor (Operator) shall observe the construction site once every seven (7) days during active construction and within 24 hours after a rainfall event greater than 0.5 inches in 24 hours.

The Contractor (Operator) shall keep a summary maintenance/construction observation report to be recorded after each site visit/observation. The Contractor (Operator) shall submit a copy of the written inspections monthly to the Owner. Records shall include the following:

1. Date and time of inspections
2. Name of person conducting inspection
3. Findings and recommendations for corrective actions if necessary
4. Corrective actions taken
5. Date and amount of rainfalls greater than 0.5 inches in 24 hours
6. Mention of any changes made to the SWPPP
7. A site map indicating active construction areas and land disturbing activities.

The Contractor (Operator) must keep the SWPPP, all inspection reports and amendments onsite. The Contractor (Operator) shall designate a specific location to keep the records whenever construction activity is in progress.

All erosion prevention and sedimentation control BMP's must be inspected to ensure integrity and effectiveness. All nonfunctional BMP's must be repaired, replaced or supplemented with functional BMP's. The Contractor (Operator) must investigate and comply with the following inspection and maintenance requirements:

1. All sediment barriers including silt fence, bio-logs, and similar devices must be repaired replaced or supplemented when they become nonfunctional or the sediment reaches 1/3 of the barrier height. These repairs shall be made within 24 hours of discovery.
2. Temporary and permanent sediment basins must be drained and the sediment removed when the depth of sediment collected in the basin reaches 1/2 the storage volume. Drainage and removal must be completed within 72 hours of discovery.
3. Surface waters, including drainage ditches and conveyance systems, must be inspected for evidence of erosion and sediment deposition. The Operator shall remove all deltas and sediment deposited in surface waters, including drainage ways, catch basins, and other drainage systems. The Operator shall re-stabilize the areas where sediment removal results in exposed soil. Removal and stabilization must take place within 7 days of discovery, unless precluded by legal, regulatory or physical constraints. The Contractor (Operator) is responsible for contacting all local, regional, state and federal authorities and receiving any applicable permits, prior to conducting any work.
4. Construction site vehicle exit locations shall be inspected daily for evidence of off-site sediment tracking onto paved surfaces. Tracked sediment must be removed from all paved surfaces on the day of discovery.
5. The Contractor (Operator) is responsible for the operation and maintenance of temporary and permanent water quality BMP's. As well as erosion and sediment control BMP's for the duration of the construction work at the site.
6. If sediment escapes the construction site off-site accumulations of sediment must be removed in a manner and at a frequency sufficient to minimize off-site impacts.

Pollution Prevention Management Measures

The Contractor (Operator) shall be responsible for all pollution prevention management measures. The Contractor (Operator) is responsible for informing all visitors and/or personnel on-site of the pollution prevention management measures.

All pollution prevention management measures are to be considered incidental to the overall project bid, unless otherwise noted. Pollution prevention management measures include but are not limited to the following:

1. The Contractor (Operator) is responsible for the proper disposal, in compliance with MPCA disposal requirements, of all solid or liquid waste and hazardous materials on-site.
2. Concrete trucks shall not be allowed to wash out or discharge surplus concrete or drum wash water on-site, unless done in an engineered leak-proof containment system. The engineered system provided by the Contractor (Operator) must include site drawings for the project file and written assurance that the system will work as designed and leave no discharge of concrete or concrete residue potential to waters of the state during a minimum of a 100-year storm event. A sign must be installed adjacent to each washout system to inform concrete equipment Operators to utilize the proper facilities.
3. All nonhazardous waste materials shall be collected and stored in a securely lidded metal dumpster or other approved containment method at the end of each day. Any alternative to a metal dumpster must be submitted in writing for approval by the project engineer. The dumpster shall be emptied as necessary to function as intended for debris collection. No construction garbage or waste material shall be buried on-site.
4. A licensed sanitary waste management Contractor shall collect all sanitary waste from the portable units at a rate necessary to maintain designed function.
5. All fertilizers shall be stored in a covered shelter. Partially used bags shall be transferred to a sealable bin to reduce the chance of spillage.
6. External washing of trucks and other construction vehicles and engine degreasing are prohibited at the construction site. All vehicles on-site shall be monitored for leaks and receive regular prevention maintenance to reduce the chance of leakage. Petroleum products shall be stored in tightly sealed containers. Which are clearly labeled. Spill kits shall be included with all fueling sources and maintenance activities. Secondary containment measures shall be installed and maintained by the Operator.
7. Any asphalt substances used on-site shall be applied in accordance with manufacturer's recommendations.
8. All paint containers and curing compounds shall be tightly sealed and stored when not required for use. Excess paint and/or curing compounds shall not be discharged into the storm sewer system and shall be properly disposed of according to manufacturer's instruction.
9. Materials and equipment necessary for spill clean-up shall be kept in an enclosed trailer or shed on-site. Equipment shall include. But not limited to, brooms, mops, dust pans, rags, gloves, goggles, absorbent (kitty litter) oil absorbent booms and diapers and buckets.
10. All spills shall be contained and cleaned up immediately upon discovery. Spills large enough to reach the storm water conveyance system shall be reported to the Minnesota duty officer at 1-800-422-0798.

Quantities

Practice	Detail / Spec.	Unit	Quantity
Standard Silt Fence	MnDOT 5-297.405 (Sheet 6)	LF	870
Sediment Control Log	MnDOT 5-297.405 (Sheet 2)	LF	May be used instead of Silt Fence
Rock Construction Entrance	MnDOT 5-297.405 (Sheet 5)	Each	1
Inlet Protection - Standard	MnDOT 5-297.405 (Sheet 4)	Each	8
Erosion Control Seed Mix 21-111	MnDOT 2575	SY	As Needed
Fiber Blanket	MnDOT 3885	SY	As Needed
Hydro Mulch	MnDOT 3882	SY	As Needed
Sod	MnDOT 3878	SY	TBD

Amendments to the SWPPP

The SWPPP will be amended as needed and/or as required by provisions of the permit. Amendments will be approved by both the Owner and Contractor (Operator) and will be attached to the SWPPP as an additional sheet. The SWPPP and amendments will be kept on site by the Contractor (Operator) whenever construction activity is in progress.

CITY OF MINNEAPOLIS EROSION CONTROL NOTES

1. CONTRACTOR MUST CALL A CONSTRUCTION START 48 HOURS PRIOR TO ANY LAND DISTURBANCE 612-673-3867. FAILURE TO DO SO MAY RESULT IN FINES, THE REVOCATION OF PERMIT AND A STOP WORK ORDER BEING ISSUED.
2. INSTALL PERIMETER EROSION CONTROL AT THE LOCATIONS SHOWN ON THE PLANS PRIOR TO THE COMMENCEMENT OF ANY LAND DISTURBANCE OR CONSTRUCTION ACTIVITIES.
3. BEFORE BEGINNING CONSTRUCTION, INSTALL A TEMPORARY ROCK CONSTRUCTION ENTRANCE AT EACH POINT WHERE VEHICLES EXIT THE CONSTRUCTION SITE. USE 2 INCH OR GREATER DIAMETER ROCK IN A LAYER AT LEAST 6 INCHES THICK ACROSS THE ENTIRE WIDTH OF THE ENTRANCE. EXTEND THE ROCK ENTRANCE AT LEAST 50 FEET INTO THE CONSTRUCTION ZONE USING A GEO-TEXTILE FABRIC BENEATH THE AGGREGATE TO PREVENT MIGRATION OF SOIL INTO THE ROCK FROM BELOW.
4. REMOVE ALL SOILS AND SEDIMENTS TRACKED OR OTHERWISE DEPOSITED ONTO PUBLIC AND PRIVATE PAVEMENT AREAS. REMOVAL SHALL BE ON A DAILY BASIS WHEN TRACKING OCCURS AND MAY BE ORDERED BY MINNEAPOLIS INSPECTORS AT ANY TIME IF CONDITIONS WARRANT. SWEEPING SHALL BE MAINTAINED THROUGHOUT THE DURATION OF THE CONSTRUCTION AND DONE IN A MANNER TO PREVENT DUST BEING BLOWN TO ADJACENT PROPERTIES.
5. INSTALL INLET PROTECTION AT ALL PUBLIC AND PRIVATE CATCH BASIN INLETS, WHICH RECEIVE RUNOFF FROM THE DISTURBED AREAS. CONTRACTOR SHALL CLEAN, REMOVE SEDIMENT OR REPLACE STORM DRAIN INLET PROTECTION DEVISED ON A ROUTINE BASIS SUCH THAT THE DEVISES ARE FULLY FUNCTIONAL FOR THE NEXT RAIN EVENT. SEDIMENT DEPOSITED IN AND/OR PLUGGING DRAINAGE SYSTEMS IS THE RESPONSIBILITY OF THE CONTRACTOR. HAY BALES OR FILTER FABRIC WRAPPED GRATES ARE NOT ALLOWED FOR INLET PROTECTION.
6. LOCATE SOIL OR DIRT STOCKPILES NO LESS THAN 25 FEET FROM ANY PUBLIC OR PRIVATE ROADWAY OR DRAINAGE CHANNEL. IF REMAINING FOR MORE THAN SEVEN DAYS, STABILIZE THE STOCKPILES BY MULCHING, VEGETATIVE COVER, TARPS, OR OTHER MEANS. CONTROL EROSION FROM ALL STOCKPILES BY PLACING SILT BARRIERS AROUND THE PILES. TEMPORARY STOCKPILES LOCATED ON PAVED SURFACE MUST BE NO LESS THAN TWO FEET FROM THE DRAINAGE/GUTTER LINE AND SHALL BE COVERED IF LEFT MORE THAN 24 HOURS.
7. MAINTAIN ALL TEMPORARY EROSION AND SEDIMENT CONTROL DEVICES IN PLACE UNTIL THE CONTRIBUTING DRAINAGE AREA AS BEEN STABILIZED. INSPECT TEMPORARY EROSION AND SEDIMENT CONTROL DEVICES ON A DAILY BASIS AND REPLACE DETERIORATED, DAMAGED, OR ROTTED EROSION CONTROL DEVICES IMMEDIATELY.
8. TEMPORARILY OR PERMANENTLY STABILIZE ALL CONSTRUCTION AREAS WHICH HAVE UNDERGONE FINAL GRADING, AND ALL AREAS IN WHICH GRADING OR SITE BUILDING CONSTRUCTION OPERATIONS ARE NOT ACTIVELY UNDERWAY AGAINST EROSION DUE TO RAIN, WIND AND RUNNING WATER WITHIN 7-14 DAYS. USE SEED AND MULCH, EROSION CONTROL MATTING, AND/OR SODDING AND STAKING IN GREEN SPACE AREAS. REMOVE ALL TEMPORARY SYNTHETIC, STRUCTURAL, NON-BIODEGRADABLE EROSION AND SEDIMENT CONTROL DEVICES AFTER THE SITE HAS UNDERGONE FINAL STABILIZATION WITH PERMANENT VEGETATION ESTABLISHMENT. FINAL STABILIZATION FOR PURPOSES OF THIS REMOVAL IS 70% ESTABLISHED COVER OVER DENUDED AREA.
9. READY MIXED CONCRETE AND CONCRETE BATCH/MIX PLANTS ARE PROHIBITED WITHIN THE PUBLIC RIGHT OF WAY. ALL CONCRETE RELATED PRODUCTION, CLEANING AND MIXING ACTIVITIES SHALL BE DONE IN THE DESIGNATED CONCRETE MIXING/WASHOUT LOCATIONS AS SHOWN IN THE EROSION CONTROL PLAN. UNDER NO CIRCUMSTANCE MAY WASHOUT WATER DRAIN ONTO THE PUBLIC RIGHT OF WAY OR INTO ANY PUBLIC OR PRIVATE STORM DRAIN CONVEYANCE.
10. CHANGES TO APPROVED EROSION CONTROL PLAN MUST BE APPROVED BY THE EROSION CONTROL INSPECTOR PRIOR TO IMPLEMENTATION. CONTRACTOR TO PROVIDE INSTALLATION AND DETAILS FOR ALL PROPOSED ALTERNATE TYPE DEVICES.
11. IF DEWATERING OR PUMPING OF WATER IS NECESSARY, THE CONTRACTOR IS RESPONSIBLE FOR OBTAINING ANY NECESSARY PERMITS AND/OR APPROVALS PRIOR TO DISCHARGE OF ANY WATER FROM THE SITE. IF THE DISCHARGE FROM THE DEWATERING OR PUMPING PROCESS IS TURBID OR CONTAINS SEDIMENT LADEN WATER, IT MUST BE TREATED THROUGH THE USE OF SEDIMENT TRAPS, VEGETATIVE FILTER STRIPS, OR OTHER SEDIMENT REDUCING MEASURES SUCH THAT THE DISCHARGE IS NOT VISIBLY DIFFERENT FROM THE RECEIVING WATER. ADDITIONAL EROSION CONTROL MEASURES MAY BE REQUIRED AT THE DISCHARGE POINT TO PREVENT SCOUR EROSION. THE CONTRACTOR SHALL PROVIDE A DEWATERING/PUMPING PLAN TO THE EROSION CONTROL INSPECTOR PRIOR TO INITIATING DEWATERING ACTIVITIES.

JLG architects
801 Washinton Ave. N. #120
Minneapolis, MN 55401
phone 612.746.4260
facsimile 612.746.4754
www.jlgarchitects.com
copyright © 2016

Élan DESIGN LAB
Civil Engineering | Landscape Architecture | Construction Services
901 N 3rd STREET, SUITE 120
MINNEAPOLIS, MN 55401
p 612.260.7980
f 612.260.7990
www.elanlab.com

CERTIFICATION
I hereby certify that this plan was prepared by me, or under my direct supervision, and that I am a duly Licensed Professional Engineer under the laws of the state of MINNESOTA.
Stephen M. Johnston
REGISTRATION NO. 18914
DATE 07/12/16

PRELIMINARY
NOT FOR CONSTRUCTION

REVISION SCHEDULE		
NO.	DESCRIPTION	DATE

CLIENT
PHILLIPS COMMUNITY CENTER AQUATICS FACILITY
Minneapolis, MN

DATE 07/12/16
PHASE PDR RESUBMITTAL
PROJECT 16076
SHEET **C302**
SWPPP PLAN

6/13/2016 9:29:56 AM

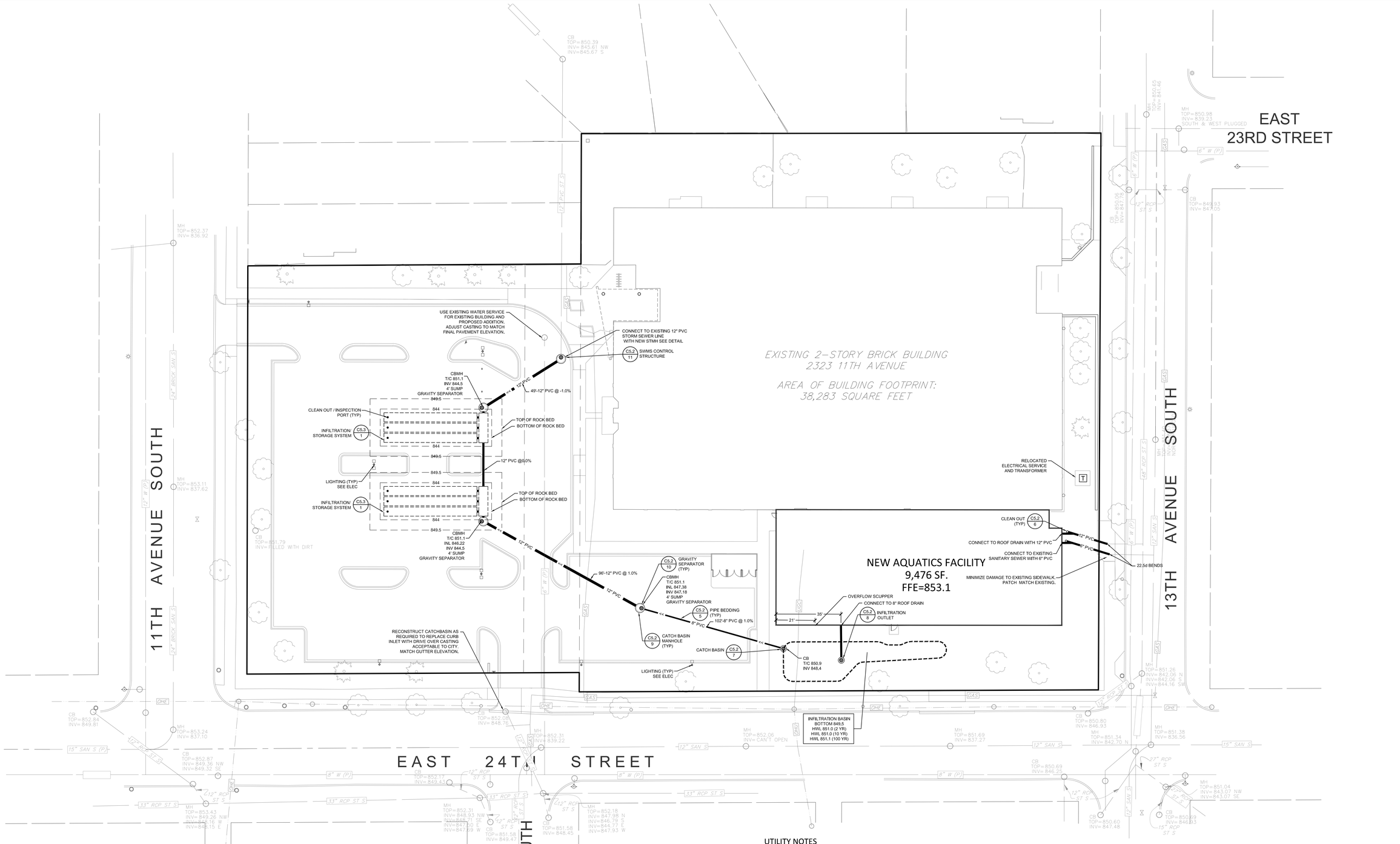

UTILITY NOTES

1. BACKGROUND INFORMATION AND TOPOGRAPHIC SURVEY FOR RECONSTRUCTION AREA PROVIDED BY SUNDE LAND SURVEYING, BLOOMINGTON, MINNESOTA ON AUGUST 3, 2015, EXPRESSLY FOR THIS PROJECT. ELAN DESIGN LAB CANNOT GUARANTY THE ACCURACY OR COMPLETENESS OF THIS INFORMATION. VERIFY ALL FIELD CONDITIONS AND UTILITY LOCATIONS PRIOR TO EXCAVATION/CONSTRUCTION. IF ANY DISCREPANCIES OR UNKNOWN UTILITIES ARE FOUND THAT IMPACT DESIGN OR IMPAIR CONSTRUCTION, THE ENGINEER AND OWNER SHOULD BE IMMEDIATELY NOTIFIED.
2. VERIFY ALL CONNECTIONS TO EXISTING UTILITY SERVICES PRIOR TO CONSTRUCTION. ANY DISCREPANCIES BETWEEN LOCATED UTILITIES AND THE EXISTING CONDITIONS PLAN SHOULD BE NOTED AND FORWARDED TO THE ENGINEER.
4. CONTRACTOR TO PROVIDE ADEQUATE MEANS AND METHODS TO ASSURE ADJACENT PROPERTY IS NOT DAMAGED DURING UTILITY INSTALLATION.
5. PIPE LENGTHS SHOWN ARE MEASURED FROM CENTER OF STRUCTURE TO CENTER OF STRUCTURE.
6. UTILITY SERVICE LOCATIONS WITHIN BUILDING ARE SHOWN CORRECT AS OF THE DATE OF THIS PLAN. THE CONTRACTOR SHALL VERIFY LOCATIONS BY COMPARING THIS PLAN WITH THE MECHANICAL PLANS PRIOR TO ANY UTILITY CONSTRUCTION.
7. PIPE MATERIALS: (TO BE VERIFIED)

SAN SEWER	PVC SDR 26
STORM SEWER	PVC
UNDERGROUND DETENTION	CMP, HDPE, OR PVC

8. ALL UTILITY CONSTRUCTION TO CONFORM WITH STATE, CITY ENGINEER'S ASSOCIATION OF MINNESOTA (CEAM), AND CITY OF MINNEAPOLIS STANDARD SPECIFICATIONS.
9. ADJUST ALL STRUCTURES, PUBLIC AND PRIVATE. TO PROPOSED GRADES WHERE DISTURBED. COMPLY WITH ALL REQUIREMENTS OF UTILITY OWNERS. STRUCTURES BEING RESET TO PAVED AREAS TO MEET OWNERS REQUIREMENTS FOR TRAFFIC LOADING.
10. COORDINATE WITH ELECTRIC CONTRACTOR TO PROVIDE CONDUITS AS NECESSARY FOR SITE LIGHTING. SEE ELECTRICAL PLAN FOR ADDITIONAL SITE ELECTRICAL INFORMATION.
11. THE PRIMARY ELECTRIC, TRANSFORMER, AND METER IS PROVIDED AND INSTALLED BY XCEL ENERGY. THE SECONDARY ELECTRIC SHALL BE INSTALLED FROM MECHANICAL ROOM TO THE TRANSFORMER AND IS THE RESPONSIBILITY OF THE CONTRACTOR.
13. COORDINATE TELEPHONE WITH QWEST TO PROVIDE SERVICE. CONTRACTOR TO PROVIDE A 3" PVC CONDUIT WITH PULL-STRING FROM EXISTING SERVICE TO THE BUILDING.
14. COORDINATE INSTALLATION OF NEW GAS SERVICE WITH CENTER POINT ENERGY AT (612) 321-4939. NEW SERVICE TO BE INSTALLED AFTER THE SLAB/FOUNDATION IS COMPLETED BUT PRIOR TO INSTALLATION OF GRAVEL BASE FOR SIDEWALK. THE GAS METER WILL BE SUPPLIED BY CENTER POINT ENERGY. THE CONTRACTOR IS RESPONSIBLE FOR THE GAS SERVICE FROM THE METER TO THE MECHANICAL ROOM.
15. PROVIDE LANDSCAPE SLEEVE PER IRRIGATION PLAN PREPARED BY LANDSCAPE CONTRACTOR. EXTEND SLEEVES 3' BEYOND THE EDGE CURB OR PAVEMENT.
16. UPON THE PROJECT'S COMPLETION THE GENERAL CONTRACTOR, PROPERTY OWNER OR RESPONSIBLE PARTY SHALL PROVIDE TO THE DEPARTMENT OF PUBLIC WORKS A FINAL STORMWATER MANAGEMENT REPORT INCLUDING RECORD DRAWINGS. THIS REPORT WILL SERVE AS A MEANS OF VERIFICATION THAT THE INTENT OF THE APPROVED STORMWATER MANAGEMENT DESIGN HAS BEEN MET. THIS FINAL REPORT SHALL SUBSTANTIATE THAT ALL ASPECTS OF THE ORIGINAL DESIGN HAVE BEEN ADEQUATELY PROVIDED FOR BY THE CONSTRUCTION OF THE PROJECT.

Know what's below. Call before you dig.

20 60 SCALE IN FEET

JLG architects
801 Washinton Ave. N. #120
Minneapolis, MN 55401
phone 612.746.4260
facsimile 612.746.4754
www.jlgarchitects.com
copyright © 2016

Élan DESIGN LAB
901 N 3rd STREET, SUITE 120
MINNEAPOLIS, MN 55401
p 612.260.7980
f 612.260.7980
www.elanlab.com

CERTIFICATION
I hereby certify that this plan, specification, or report was prepared by me or under my direct supervision, and that I am a duly Licensed Professional Engineer under the laws of the State of Minnesota.
Stephen M. Johnston
Registration Number
DATE 07/12/16

PRELIMINARY
NOT FOR CONSTRUCTION

REVISION SCHEDULE

NO.	DESCRIPTION	DATE

PHILLIPS COMMUNITY CENTER AQUATICS FACILITY

CLIENT
PHILLIPS
Minneapolis, MN

DATE 07/12/16
PHASE PDR RESUBMITTAL
PROJECT 16076
SHEET C401
UTILITY PLAN

6/13/2016 9:29:56 AM

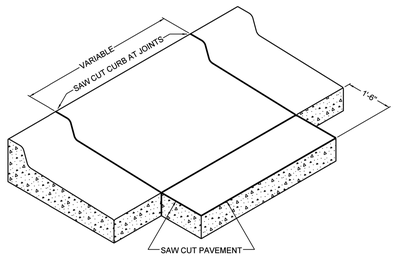

MINNEAPOLIS DEPARTMENT OF PUBLIC WORKES			
DRAWN: JFC	DATE: 9/10/07	SAW CUT AT CURB AND GUTTER REMOVAL	STANDARD PLATE NO. ROAD-1010
APPROVED: GAS	DATE: 5/19/08		

1 SAW CUT AT CURB AND GUTTER REMOVAL
NO SCALE

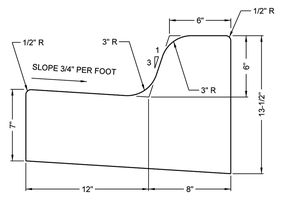

*SLOPE NOT TO EXCEED 1:20 AT CURB RAMPS

MINNEAPOLIS DEPARTMENT OF PUBLIC WORKES			
DRAWN: JFC	DATE: 4/1/08	B612 CURB AND GUTTER	STANDARD PLATE NO. ROAD-1000
APPROVED: GAS	DATE: 5/19/08		

2 B612 CONCRETE CURB & GUTTER
NO SCALE

TRUNCATED DOMES SHALL BE 4984-24Q BY NEENAH FOUNDRY COMPANY. EAST JORDAN IRON WORKS OR APPROVED EQUAL FROM MNDOT'S APPROVED PRODUCTS PAGE. CHARCOAL GREY COATED CAST IRON TRUNCATED DOME PANELS SHALL BE USED FOR ALL PEDESTRIAN RAMPS. USE ONLY ONE SUPPLIER OF PANELS WITHIN THE PROJECT.

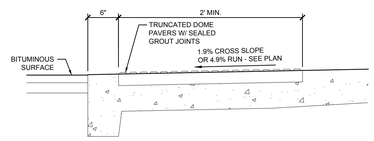

3 ACCESSIBILITY CURB RAMP
NO SCALE

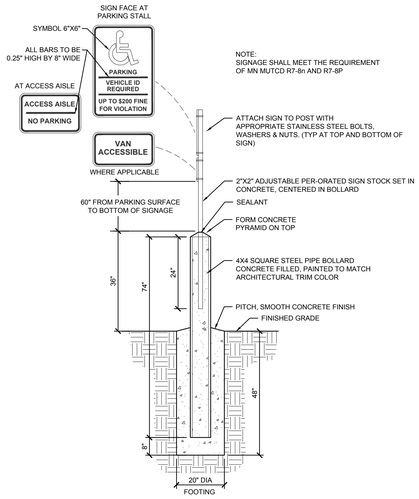

4 ACCESSIBILITY SIGNAGE
NO SCALE

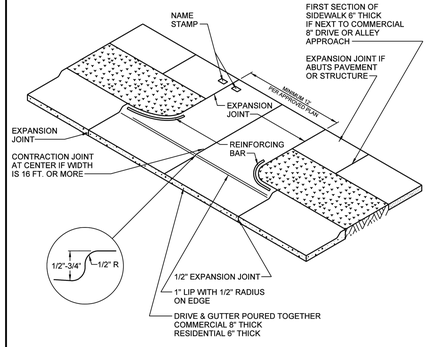

MINNEAPOLIS DEPARTMENT OF PUBLIC WORKES			
DRAWN: JFC	DATE: 9/10/07	TYPICAL DRIVEWAY	STANDARD PLATE NO. ROAD-2002
APPROVED: GAS	DATE: 5/19/08		

5 TYPICAL DRIVEWAY
NO SCALE

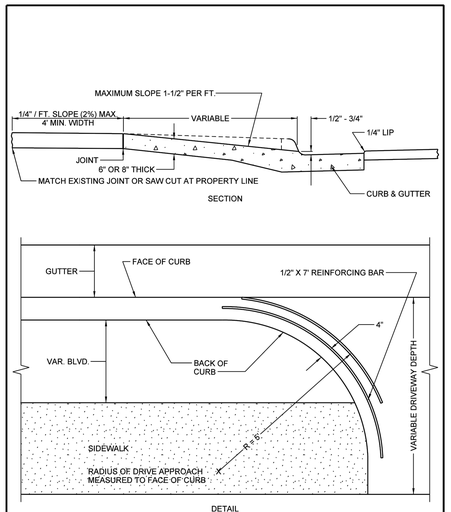

MINNEAPOLIS DEPARTMENT OF PUBLIC WORKES			
DRAWN: JFC	DATE: 9/10/07	TYPICAL DRIVEWAY CONSTRUCTION	STANDARD PLATE NO. ROAD-2001
APPROVED: GAS	DATE: 5/19/08		

6 TYPICAL DRIVEWAY CONSTRUCTION
NO SCALE

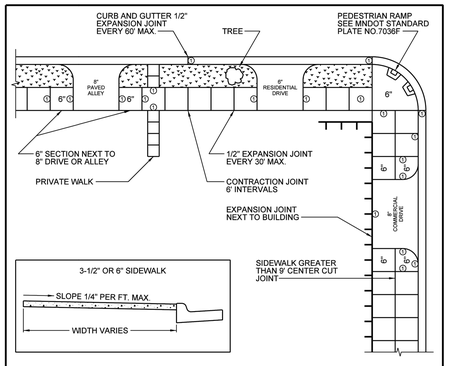

NOTE:
1 EXPANSION MATERIAL REQUIRED (SEE MNDOT SPEC BOOK, 2301.3K JOINT CONSTRUCTION).
FIRST SECTION NEXT TO COMMERCIAL DRIVEWAY OR ALLEY 8" THICK.
1/2" THICK EXPANSION JOINTS AT 30' INTERVALS (MAXIMUM).
EXPANSION TO BE USED WHEN SIDEWALK ABUTS BUILDING.
CONTRACTION JOINT TO BE CENTERED ON SIDEWALK WIDER THAN 9'.
CONTRACTION JOINT TO BE PLACED EVERY 6' OR LESS.

MINNEAPOLIS DEPARTMENT OF PUBLIC WORKES			
DRAWN: JFC	DATE: 9/10/07	TYPICAL SIDEWALK AND DRIVEWAY CONSTRUCTION	STANDARD PLATE NO. ROAD-2003
APPROVED: GAS	DATE: 5/19/08		

7 TYPICAL SIDEWALK AND DRIVEWAY CONSTRUCTION
NO SCALE

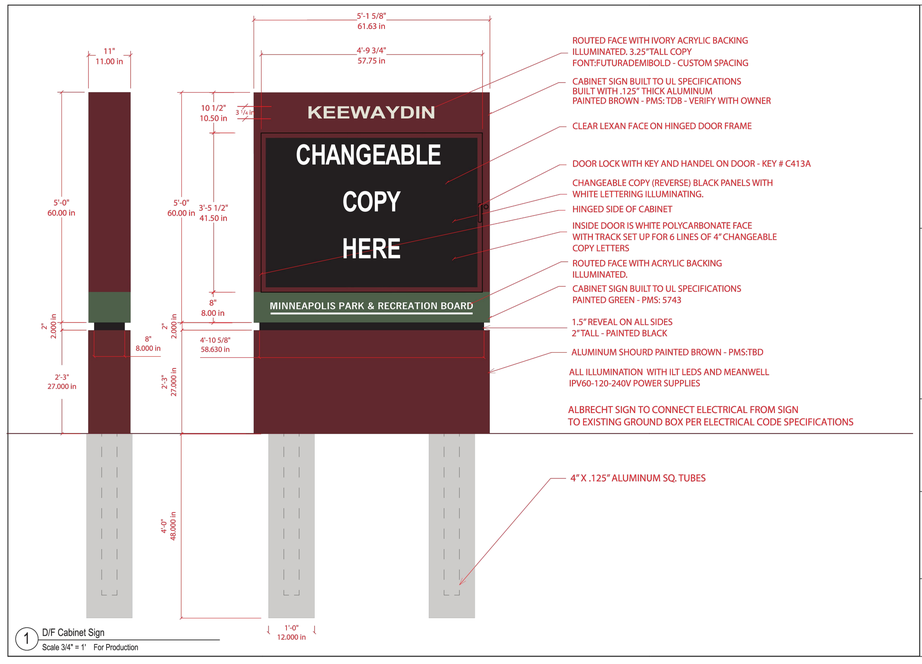

1 D/F Cabinet Sign
Scale 3/4" = 1' For Production

ALBRECHT SIGNS
- DESIGN
- FABRICATION
- INSTALLATION
- SERVICE

7775 Main St. N.E.
Fridley, MN 55432
Office: 763-754-2899
Fax: 763-767-7316

Client Name: Minneapolis Park & Rec

Location: Various

Client Approval

Landlord Approval

Start Date: 2/10/15
Last Revision: 8/6/15
Job#: 00000
Drawing Rev #: 8
Page: 1 OF 1

Sales Rep: Dave Albrecht
Designer: MCS

UL LISTED

© COPYRIGHT 2015, BY ALBRECHT SIGN COMPANY, INC. - ALL DESIGNS PRESENTED ARE THE SOLE PROPERTY OF ALBRECHT SIGN COMPANY, INC., AND MAY NOT BE REPRODUCED IN PART OR WHOLE WITHOUT WRITTEN PERMISSION FROM ALBRECHT SIGN COMPANY INC.

8 SIGN MONUMENT
NO SCALE

JLG architects
801 Washinton Ave. N. #120
Minneapolis, MN 55401
phone 612.746.4260
facsimile 612.746.4754
www.jlgarchitects.com
copyright © 2016

Élan DESIGN LAB
901 N 3rd STREET, SUITE 120
MINNEAPOLIS, MN 55401
p 612.260.7980
f 612.260.7990
www.elanlab.com

CERTIFICATION
I hereby certify that this plan, specification, or report was prepared by me or under my direct supervision and that I am a duly Licensed Professional Engineer under the laws of the State of Minnesota.
DATE 07/12/16
Stephen N. Johnston
Registered Architect

PRELIMINARY
NOT FOR CONSTRUCTION

REVISION SCHEDULE

NO.	DESCRIPTION	DATE

PHILLIPS COMMUNITY CENTER AQUATICS FACILITY

CLIENT
PHILLIPS COMMUNITY CENTER AQUATICS FACILITY
Minneapolis, MN

DATE
07/12/16

PHASE
PDR RESUBMITTAL

PROJECT
16076

SHEET
C501
DETAILS

6/13/2016 9:25:56 AM

SILT FENCE INSTALLATION

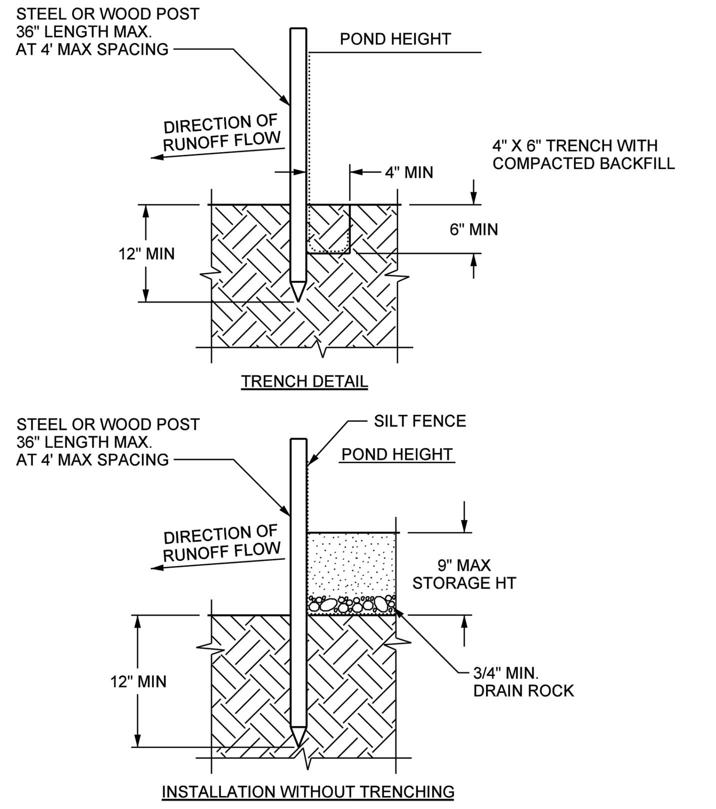

USE HI-FLOW FILTER FABRIC, 200 GAL. PER MINUTE PER SQUARE FOOT

NOTES:
1. SILT FENCE SHALL BE PLACED ON SLOPE CONTOURS TO MAXIMIZE PONDING EFFICIENCY.
2. INSPECT AND REPAIR FENCE AFTER EACH STORM EVENT AND REMOVE SEDIMENT WHEN NECESSARY, REQUIRED WHEN 1/3 FULL WITHIN 24 HOURS OF DISCOVERY. 9" MAXIMUM RECOMMENDED STORAGE HEIGHT.
3. REMOVED SEDIMENT SHALL BE DEPOSITED TO AN AREA THAT WILL NOT CONTRIBUTE SEDIMENT OFF-SITE AND PERMANENTLY STABILIZED ALSO SEE SEWR-8009.

REFERENCES:
MINNESOTA URBAN SMALL SITES BMP MANUAL
MNDOT EROSION CONTROL HANDBOOK

MINNEAPOLIS CUSTOM
MNDOT SPEC. REF. 2573, 3886, 3889.2 TYPE I
NOT TO SCALE

MINNEAPOLIS DEPARTMENT OF PUBLIC WORKS		SEDIMENT CONTROL -- SILT FENCE	STANDARD PLATE NO. SEWR-8001
DRAWN: CXD	DATE: 3/03		
APPROVED: HRS	DATE: 4/07		

1 SILT FENCE
NO SCALE

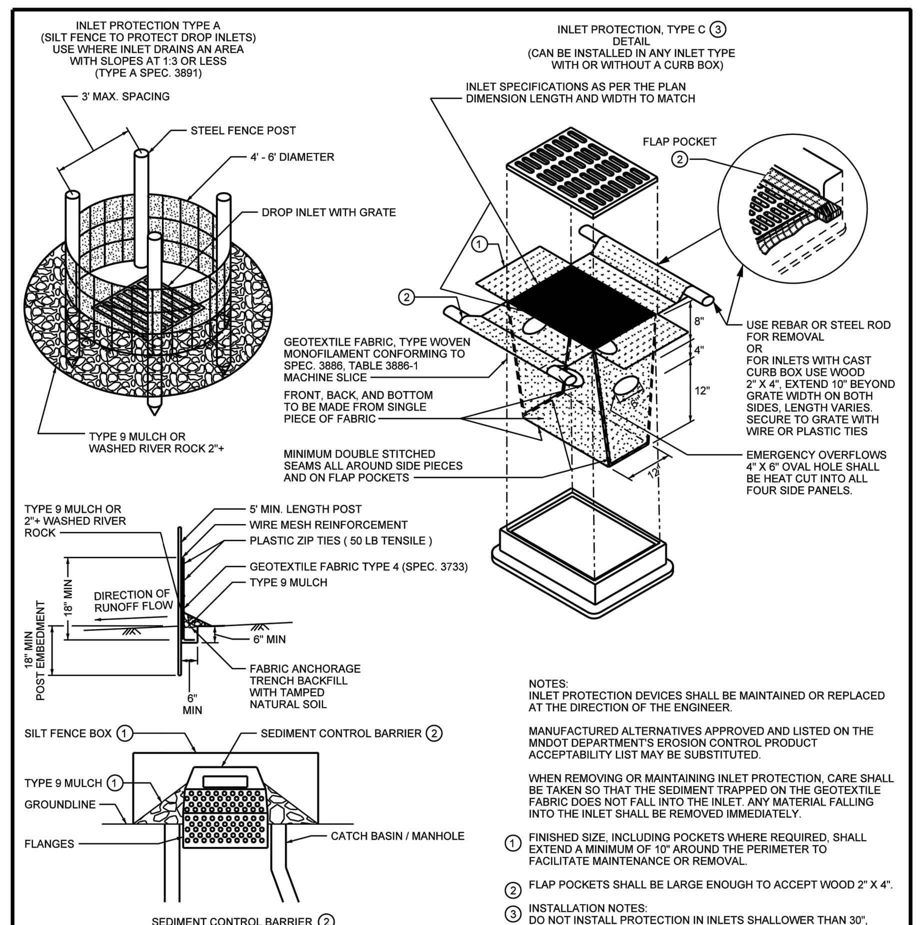

NOTES:
THE SEDIMENT CONTROL BARRIER SHALL BE A METAL OR PLASTIC/POLYETHELENE RISER SIZED TO FIT INSIDE THE CATCH BASIN/MANHOLE; HAVE PERFORATIONS TO ALLOW FOR WATER INFILTRATION; HAVE AN OVERFLOW OPENING, FLANGES AND A LID/COVER.

① USE INLET PROTECTION TYPE A OR TYPE 9 MULCH, AS DIRECTED BY THE ENGINEER.

② PAID FOR AS SEDIMENT CONTROL BARRIER.

NOTES:
INLET PROTECTION DEVICES SHALL BE MAINTAINED OR REPLACED AT THE DIRECTION OF THE ENGINEER.

MANUFACTURED ALTERNATIVES APPROVED AND LISTED ON THE MNDOT DEPARTMENT'S EROSION CONTROL PRODUCT ACCEPTABILITY LIST MAY BE SUBSTITUTED.

WHEN REMOVING OR MAINTAINING INLET PROTECTION, CARE SHALL BE TAKEN SO THAT THE SEDIMENT TRAPPED ON THE GEOTEXTILE FABRIC DOES NOT FALL INTO THE INLET. ANY MATERIAL FALLING INTO THE INLET SHALL BE REMOVED IMMEDIATELY.

① FINISHED SIZE, INCLUDING POCKETS WHERE REQUIRED, SHALL EXTEND A MINIMUM OF 10" AROUND THE PERIMETER TO FACILITATE MAINTENANCE OR REMOVAL.

② FLAP POCKETS SHALL BE LARGE ENOUGH TO ACCEPT WOOD 2" X 4".

③ INSTALLATION NOTES:
DO NOT INSTALL PROTECTION IN INLETS SHALLOWER THAN 30", MEASURED FROM THE BOTTOM OF THE INLET TO THE TOP OF THE GRATE.

TRIM EXCESS FABRIC IN THE FLOW LINE TO WITHIN 3" OF THE GRATE.

THE INSTALLED BAG SHALL HAVE A MINIMUM SIDE CLEARANCE, MAXIMUM OF 4" FROM THE BOTTOM OF THE BAG. BETWEEN THE INLET WALLS AND THE BAG, MEASURED AT THE BOTTOM OF THE OVERFLOW HOLES, OF 3". WHERE NECESSARY THE CONTRACTOR SHALL CLINCH THE BAG, USING PLASTIC ZIP TIES, TO ACHIEVE THE 3" CLEARANCE. THE TIES SHALL BE PLACED AT A MAXIMUM OF 4" FROM THE BOTTOM OF THE BAG.

REFERENCES:
MNDOT DRAFT PLATES

MINNEAPOLIS CUSTOM
MNDOT SPEC. REF. 3891
NOT TO SCALE

MINNEAPOLIS DEPARTMENT OF PUBLIC WORKS		INLET PROTECTION TYPE A & C	STANDARD PLATE NO. SEWR-8003
DRAWN: DCD	DATE: 1/05		
APPROVED: HRS	DATE: 4/07		

3 INLET PROTECTION
NO SCALE

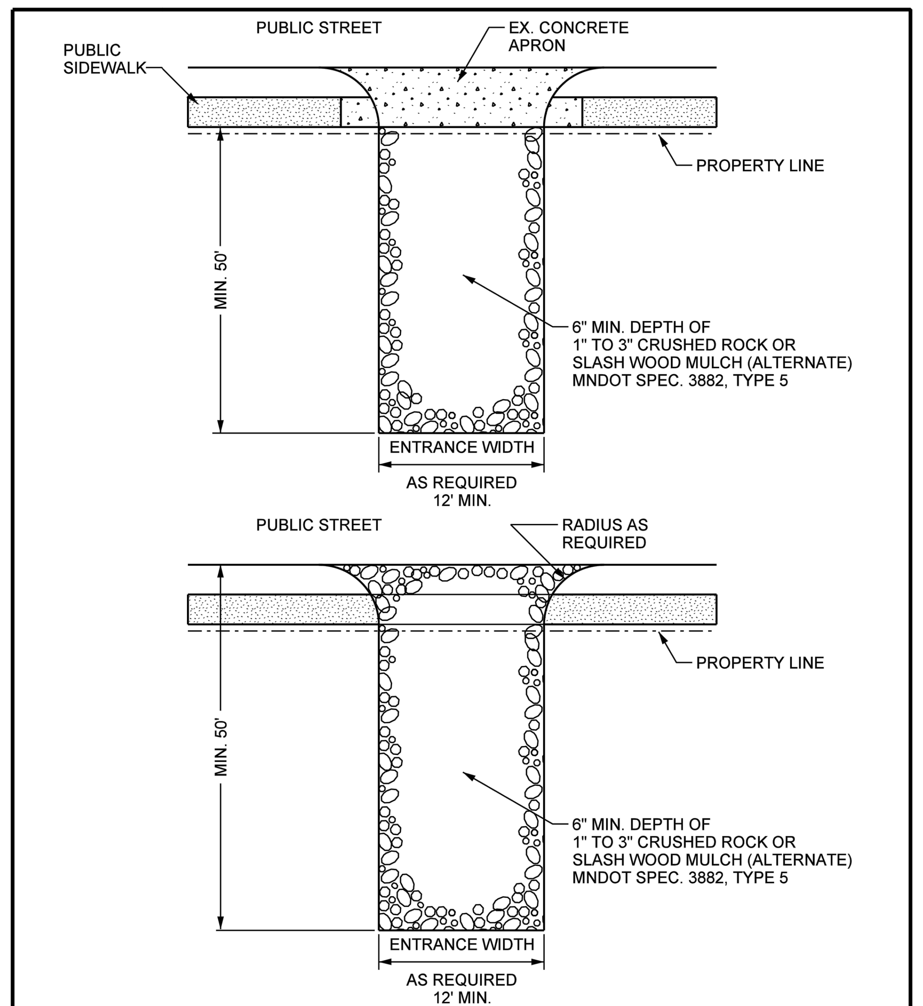

REMOVE TRACKED SEDIMENTS FROM PAVED SURFACES WITHIN 24 HOURS OF DEPOSITION
PICK UP OR VACUUM SWEEPER REQUIRED

REFERENCES:
MINNESOTA URBAN SMALL SITES BMP MANUAL, PP. 3-69 TO 3-73
MNDOT EROSION CONTROL HANDBOOK

MINNEAPOLIS CUSTOM
MNDOT SPEC. REF. 2573
NOT TO SCALE

MINNEAPOLIS DEPARTMENT OF PUBLIC WORKS		SEDIMENT CONTROL -- ROCK ENTRANCE	STANDARD PLATE NO. SEWR-8002
DRAWN: DCD	DATE: 3/07		
APPROVED: HRS	DATE: 4/07		

4 ROCK ENTRANCE
NO SCALE

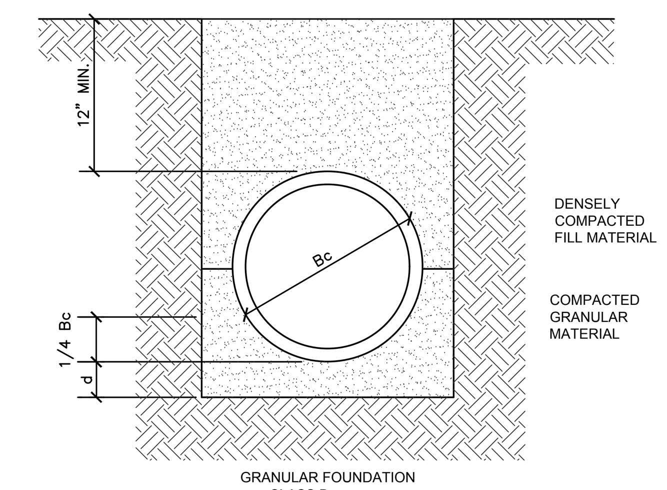

THE PIPE IS BEDDED IN COMPACTED GRANULAR MATERIAL PLACED UP TO A HEIGHT EQUAL TO ONE-HALF THE OUTSIDE DIAMETER OF THE PIPE. THE DEPTH OF THE GRANULAR BEDDING BELOW THE PIPE IS A MINIMUM OF 3" FOR 27" DIAMETER AND SMALLER PIPE, 6" FOR 66" DIAMETER AND LARGER PIPE, AND 4" FOR INTERMEDIATE SIZES. THE INITIAL FILL MATERIAL SHOULD BE DENSELY COMPACTED UP TO A HEIGHT OF 12" OVER THE TOP OF THE PIPE.

5 CLASS B PIPE BEDDING
NO SCALE

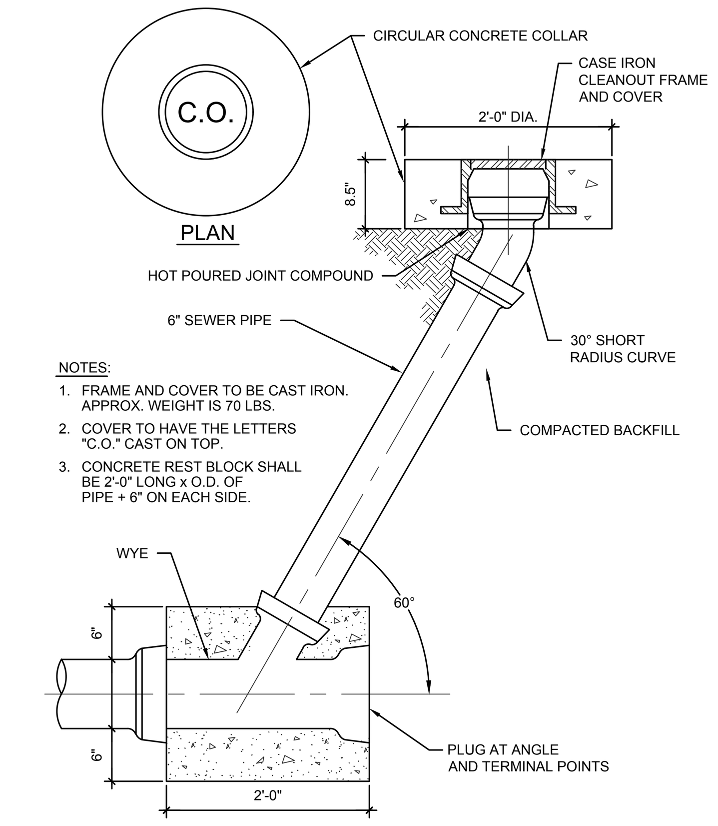

NOTES:
1. FRAME AND COVER TO BE CAST IRON. APPROX. WEIGHT IS 70 LBS.
2. COVER TO HAVE THE LETTERS "C.O." CAST ON TOP.
3. CONCRETE REST BLOCK SHALL BE 2'-0" LONG x O.D. OF PIPE + 6" ON EACH SIDE.

6 CLEAN OUT
NO SCALE

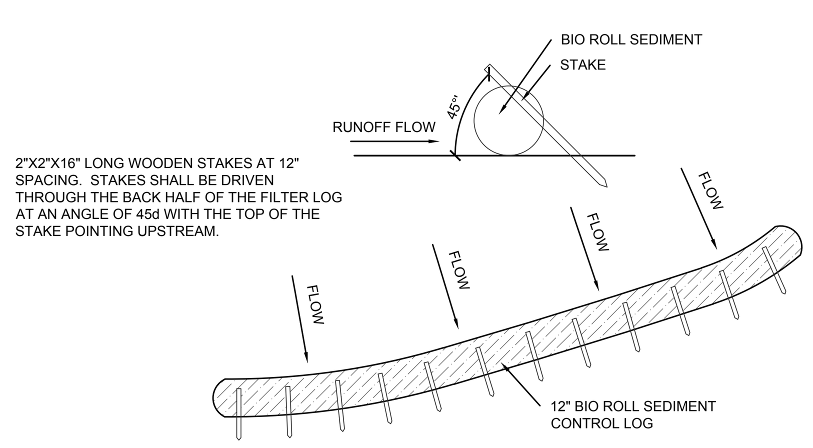

2"X2"X16" LONG WOODEN STAKES AT 12" SPACING. STAKES SHALL BE DRIVEN THROUGH THE BACK HALF OF THE FILTER LOG AT AN ANGLE OF 45d WITH THE TOP OF THE STAKE POINTING UPSTREAM.

2 BIO ROLL SEDIMENT CONTROL
NO SCALE

** USE SALVAGED FRAMES AND OPEN GRATES TO THE EXTENT POSSIBLE

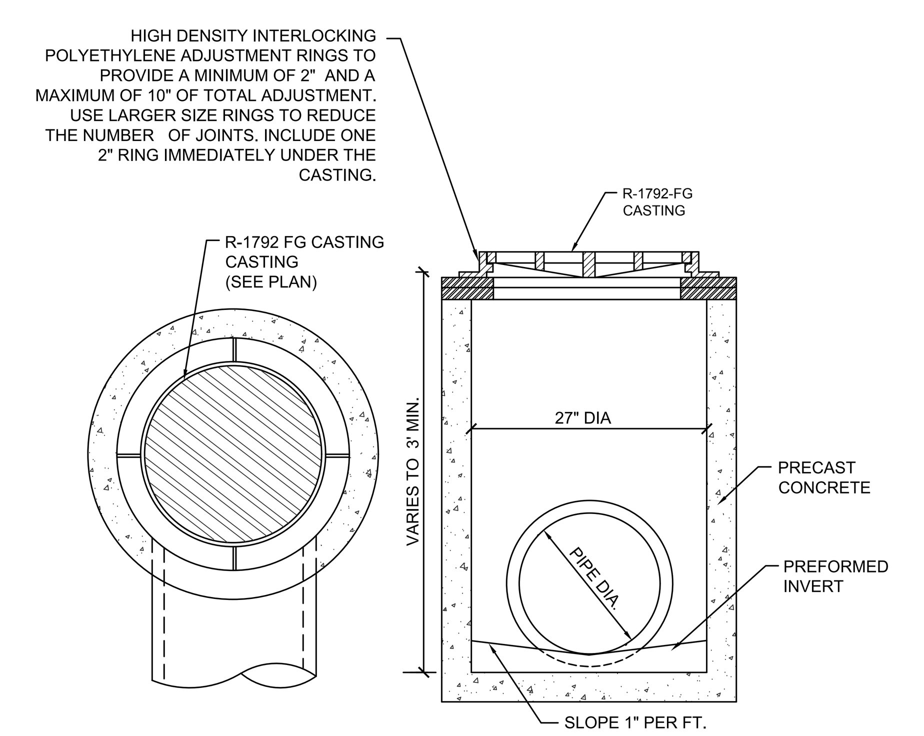

7 CATCH BASIN
NO SCALE

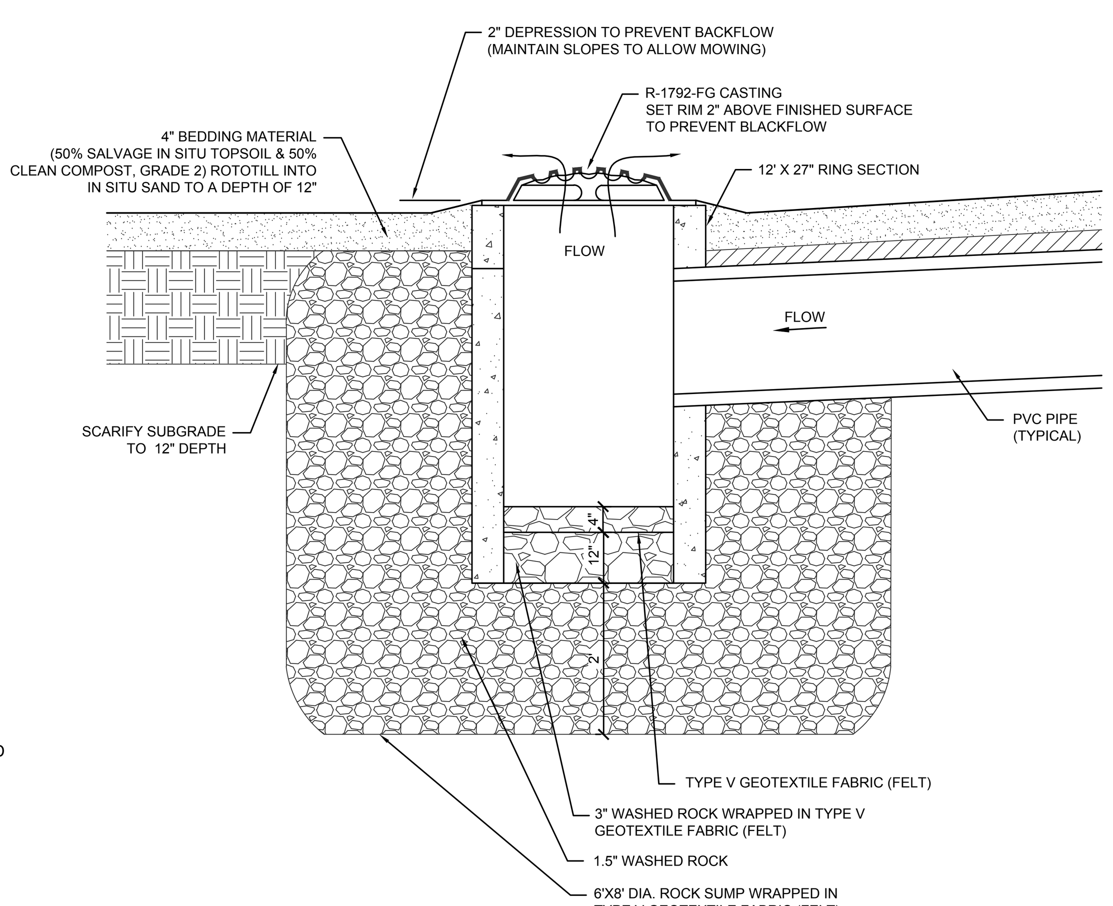

8 INFILTRATION OUTLET
NO SCALE

** USE SALVAGED FRAMES AND OPEN GRATES TO THE EXTENT POSSIBLE

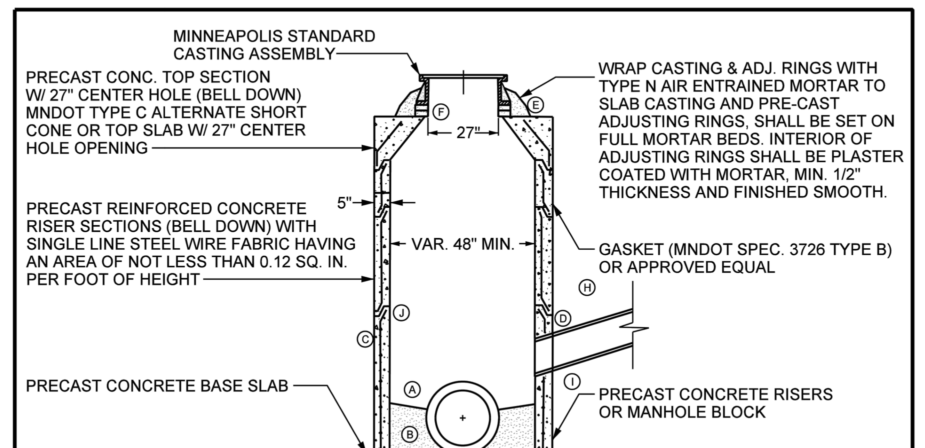

FOLLOW MNDOT 2451.3-C - FOUNDATION PREPARATION AND COMPACTION REQUIREMENTS OF MNDOT 2105.3 F1 - SPECIFIED DENSITY METHOD (100% COMPACTION REQUIREMENTS OF STANDARD PROCTOR)
MNDOT DESIGN F, MODIFIED
CONTINUOUS INSIDE DIAMETER
USE MINNEAPOLIS SHORT CONE SECTION (MNDOT TYPE C ALTERNATE) OR TOP SLAB ONLY

Ⓐ BOTTOM TO BE SHAPED 2/3 OF PIPE DIAMETER WITH POURED CONCRETE TO PROVIDE EFFICIENT FLOW.
Ⓑ WHEN THE INVERT OF THE INLET PIPE IS BELOW THE SPRING LINE OF THE MAIN, THEN PROVIDE CONCRETE "POWER FLOWS" FOR POSITIVE DOWN STREAM FLOW THROUGH MANHOLE.
Ⓒ PRE-CAST CONCRETE MANHOLE SECTIONS.
Ⓓ FILL AROUND INLET PIPE AND LIFTING HOLES WITH CEMENT MORTAR, TYPE N AIR ENTRAINED, FINISH SMOOTH AS NECESSARY. ALL PIPES CONNECTING TO MH'S SHALL BE TRIMMED FLUSH TO THE INTERIOR WALL OF THE MH STRUCTURE.
Ⓔ MANHOLE CASTING SHALL BE SET ON A FULL MORTAR BED, TYPE N AIR ENTRAINED
Ⓕ THE NUMBER OF CONCRETE ADJUSTING RINGS SHALL BE LIMITED TO PROVIDE A MAXIMUM THICKNESS OF 8" INCLUDING MORTAR, TYPE N AIR ENTRAINED WITH A MINIMUM OF 1 - 2" ADJUSTING RING. ALL ADJUSTING RINGS TO BE NEATLY SEALED WITH CONCRETE GROUT, TYPE N AIR ENTRAINED, ON THE INTERIOR OF THE STRUCTURE. MINIMUM OF 2" OF ADJUSTING RINGS & MORTAR TYPE N AIR ENTRAINED REQUIRED. ALL WOOD AND NON-CONCRETE ADJUSTING DEVICES SHALL BE REMOVED.
Ⓖ CONCRETE MANHOLE BLOCK MAY BE USED WITH THE APPROVAL OF CITY ENGINEER. INTERIOR & EXTERIOR OF BLOCK WORK SHALL BE MORTAR PLASTERED, TYPE N AIR ENTRAINED, TO A SMOOTH FINISH, MIN. 1/2" THICKNESS.
Ⓗ SUITABLE BACKFILL UNIFORMLY DISTRIBUTED IN 8" OR LESS LAYERS AND COMPACTED BEFORE SUCCESSIVE LAYERS ARE ADDED. MNDOT 2451.3 D - BACKFILLING EXCAVATIONS, COMPACTION IN ACCORDANCE WITH MNDOT 2105.3 F1 - SPECIFIED DENSITY METHOD.
Ⓙ FILL ANNULAR SPACE ON BELL END OF 1ST RISER SECTION WITH BRICK AND MORTAR, TYPE N AIR ENTRAINED, IF REQUIRED.
Ⓘ WATER STOP REQUIRED ON PVC, DIP, VCP, HDPE, HOBAS, PPP.

MINNEAPOLIS SHORT CONE SECTION SHALL BE USED UNLESS OTHERWISE SPECIFIED IN THE PLANS AND PLASTER COATED WITH TYPE N AIR ENTRAINED MORTAR (TO A SMOOTH FINISH).
ALL PRE-CAST MH RISER SECTIONS SHALL BE CONFIGURED TO PLACE THE BELL END DOWN.

MINNEAPOLIS CUSTOM
MNDOT SPEC. REF. 2506
MODIFIED MNDOT 4000J, 4005L
NOT TO SCALE

MINNEAPOLIS DEPARTMENT OF PUBLIC WORKS		TYPICAL MANHOLE CONSTRUCTION	STANDARD PLATE NO. SEWR-1000-R1
DRAWN: DCD	DATE: 12/09		
APPROVED: HRS	DATE: 12/09		

9 MANHOLE CONSTRUCTION
NO SCALE

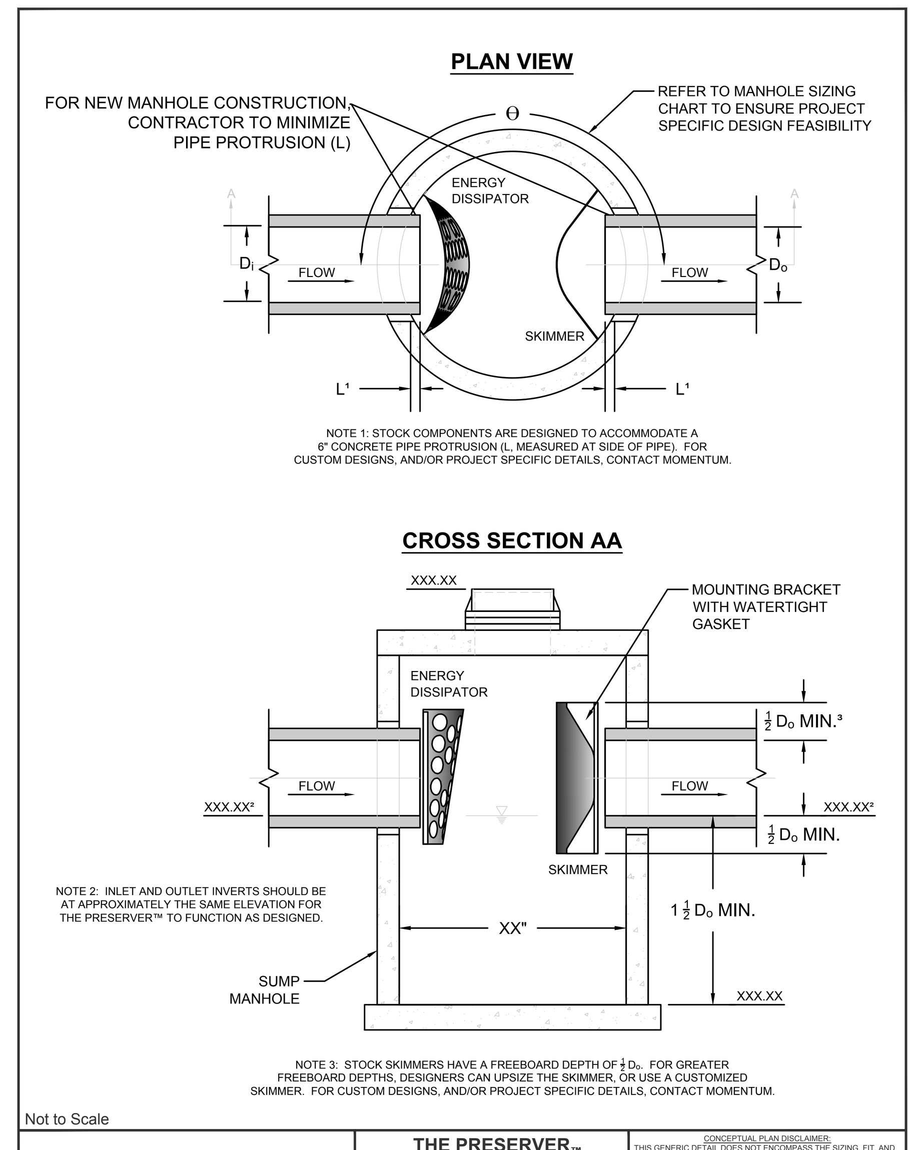

NOTE 1: STOCK COMPONENTS ARE DESIGNED TO ACCOMMODATE A 6" CONCRETE PIPE PROTRUSION (L, MEASURED AT SIDE OF PIPE). FOR CUSTOM DESIGNS, AND/OR PROJECT SPECIFIC DETAILS, CONTACT MOMENTUM.

NOTE 2: INLET AND OUTLET INVERTS SHOULD BE AT APPROXIMATELY THE SAME ELEVATION FOR THE PRESERVER™ TO FUNCTION AS DESIGNED.

NOTE 3: STOCK SKIMMERS HAVE A FREEBOARD DEPTH OF ½ Do. FOR GREATER FREEBOARD DEPTHS, DESIGNERS CAN UPSIZE THE SKIMMER, OR USE A CUSTOMIZED SKIMMER. FOR CUSTOM DESIGNS, AND/OR PROJECT SPECIFIC DETAILS, CONTACT MOMENTUM.

Not to Scale

THE PRESERVER™ STANDARD DETAIL
ENERGY DISSIPATOR WITH SKIMMER

CONCEPTUAL PLAN DISCLAIMER:
THIS GENERIC DETAIL DOES NOT ENCOMPASS THE SIZING, FIT, AND APPLICABILITY OF THE PRESERVER FOR THIS SPECIFIC PROJECT. IT IS THE ULTIMATE RESPONSIBILITY OF THE DESIGN ENGINEER TO ASSURE THAT THE STORMWATER SYSTEM DESIGN IS IN FULL COMPLIANCE WITH ALL APPLICABLE LAWS AND REGULATIONS. MOMENTUM ENVIRONMENTAL LLC DOES NOT APPROVE PLANS, SIZING, OR SYSTEM DESIGNS. THE DESIGN ENGINEER IS RESPONSIBLE FOR ALL DESIGN DECISIONS.

877-773-0073 • www.MomentumEnv.com

10 GRAVITY SEPARATOR
(OTHER SYSTEMS PROVIDING SAME FUNCTIONALITY MAY BE USED)
NO SCALE

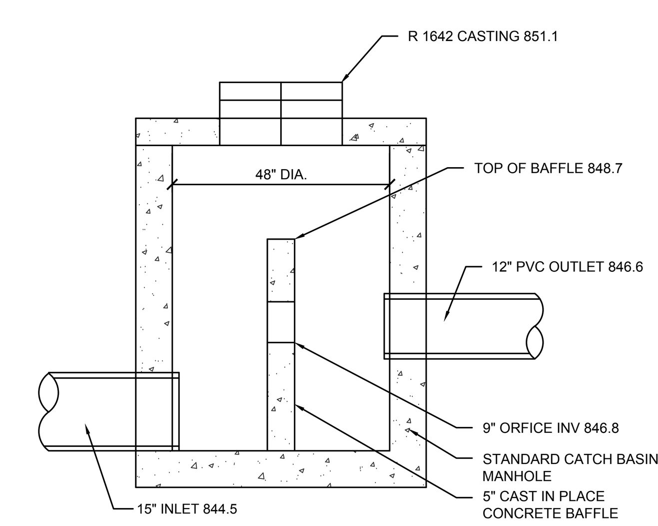

10 SWMS CONTROL STRUCTURE
NO SCALE

JLG architects
801 Washinton Ave. N. #120
Minneapolis, MN 55401
phone 6 1 2.7 4 6.4 2 6 0
facsimile 6 1 2.7 4 6.4 7 5 4
www.jlgarchitects.com

copyright © 2016

Élan DESIGN LAB
Civil Engineering | Landscape Architecture | Construction Services
901 N 3rd STREET, SUITE 120
MINNEAPOLIS, MN 55401
p 612.260.7980
f 612.260.7990
www.elanlab.com

CERTIFICATION
I hereby certify that this plan was prepared by me, or under my direct supervision, and that I am a duly Licensed Professional Engineer under the laws of the state of MINNESOTA.
Stephen M. Johnston
REGISTRATION NO. 18914
DATE 07/12/16

PRELIMINARY
NOT FOR CONSTRUCTION

REVISION SCHEDULE		
NO.	DESCRIPTION	DATE

CLIENT
PHILLIPS COMMUNITY CENTER AQUATICS FACILITY
Minneapolis, MN

DATE 07/12/16
PHASE PDR RESUBMITTAL
PROJECT 16076
SHEET C502
DETAILS

6/13/2016 9:29:56 AM

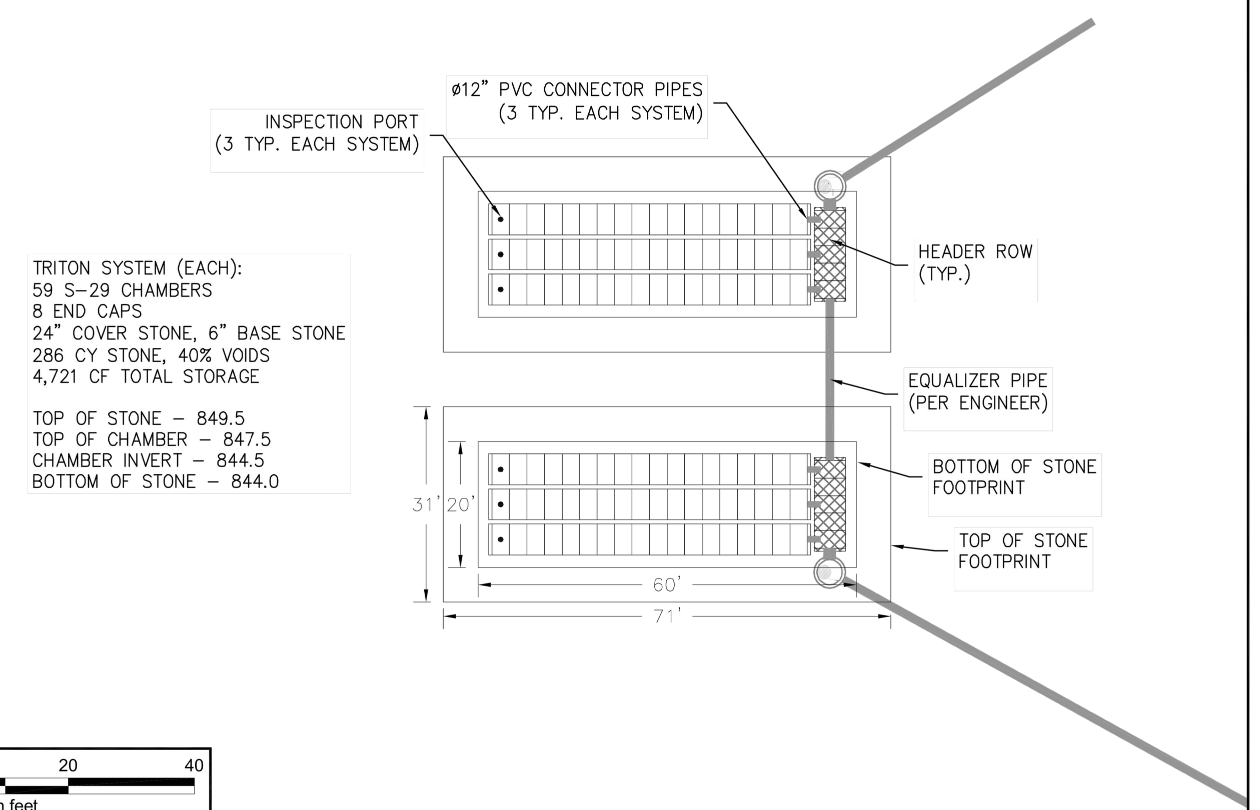

9864 EAST GRAND RIVER, SUITE 110, #176
BRIGHTON, MI 48116
PHONE: (810) 222-7652 • FAX: (810) 222-1769
WWW.TRITONSWS.COM

TRITON LAYOUT		OWNER:	PHILLIPS COMMUNITY CENTER	DESIGNED BY: LRH
AQUATICS FACILITY		ENGINEER:	ELAN DESIGN LAB	REVISIONS:
MINNEAPOLIS, MN	7-11-2016	TRITON PRJ. #:	<PROJECT #>	

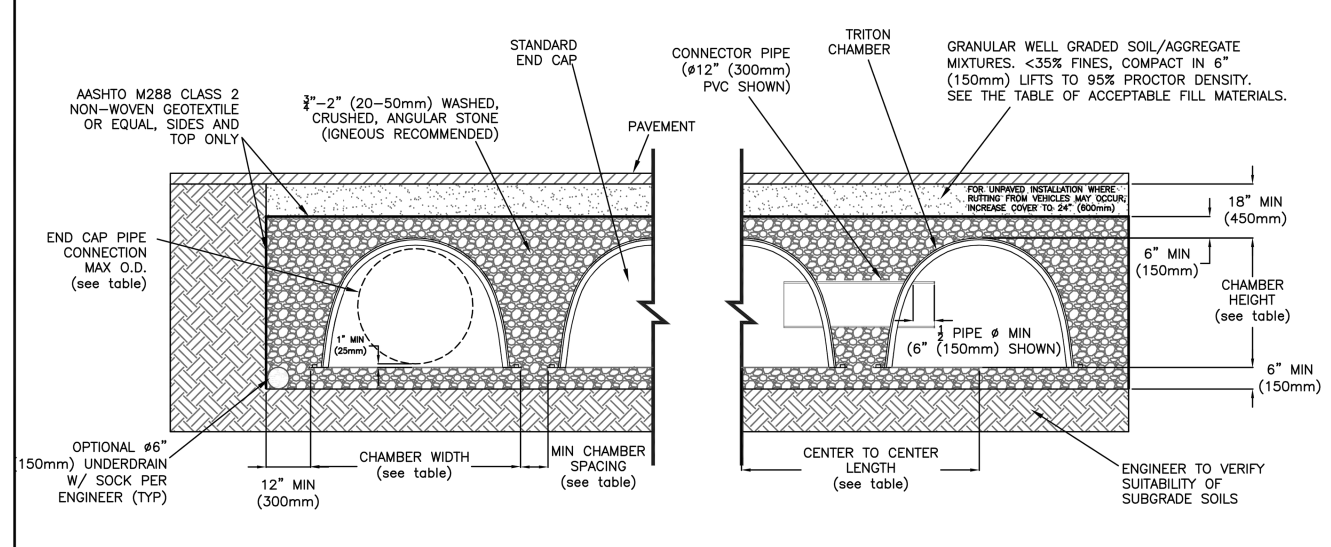

	CHAMBER WIDTH	CHAMBER SPACING	CENTER TO CENTER LENGTH	CHAMBER HEIGHT	MAX END CAP CONNECTION
S29	59" (1499mm)	6.0" (150mm) *7.5" (190mm)	66.5" (1690mm)	36" (914mm)	32" (813mm)
S22	55" (1397mm)	6.0" (150mm)	61.0" (1549mm)	35" (889mm)	30" (762mm)
C10	39.7" (1008mm)	6.0" (150mm)	45.7" (1161mm)	25" (635mm)	20" (508mm)
M6	33.6" (853mm)	6.0" (150mm)	39.6" (1006mm)	17.5" (445mm)	14" (356mm)

*7.5" (190mm) SPACING OF DISTRIBUTION ROWS IS REQUIRED ONLY WHEN A PERPENDICULAR MAIN HEADER ROW IS USED. IF AN INLINE MAIN HEADER ROW IS USED, THEN MIN SPACING CAN BE 6" (150mm)

CONCEPTUAL PLAN DISCLAIMER
THIS GENERIC DETAIL DOES NOT ENCOMPASS THE SIZING, FIT, AND APPLICABILITY OF THE TRITON CHAMBER SYSTEM FOR THIS SPECIFIC PROJECT. IT IS THE ULTIMATE RESPONSIBILITY OF THE DESIGN ENGINEER TO ASSURE THAT THE STORMWATER SYSTEM DESIGN IS IN FULL COMPLIANCE WITH ALL APPLICABLE LAWS AND REGUALTIONS. TRITON PRODUCTS MUST BE DESIGNED AND INSTALLED IN ACCORDANCE WITH TRITON'S MINIMUM REQUIREMENTS. TRITON STORMWATER SOLUTIONS DOES NOT APPROVE PLANS, SIZING, OR SYSTEM DESIGNS. THE DESIGN ENGINEER IS RESPONSIBLE FOR ALL DESIGN DECISIONS.

7600 EAST GRAND RIVER, STE.195
BRIGHTON, MI 48114
PHONE: (810) 222-7652 • FAX: (810) 222-1769
WWW.TRITONSWS.COM

CHAMBER CROSS SECTION
INFILTRATION

TRITON - STANDARD DETAILS — REVISED: 02-26-16 JWM

NOTES:

- TRITON HEADER ROW SEDIMENT CONTAINMENT AND SCOUR PROTECTION OPTIONS:
  - •• SEDIMENT FLOORS PLACED ABOVE ONE LAYER OF AASHTO M288 CLASS 2 NON-WOVEN GEOTEXTILE OR EQUAL.
  - •• IMPERMEABLE MEMBRANE.
  - •• TWO LAYERS OF AASHTO M288 CLASS 1 WOVEN GEOTEXTILE OR EQUAL.
- GEOTEXTILE OR IMPERMEABLE MEMBRANE TO BE PLACED AS ONE PIECE, LENGTHWISE ABOVE BASE STONE:
  - •• 7.0' (210 mm) WIDTH FOR S-29 CHAMBERS
  - •• 7.0' (210 mm) WIDTH FOR S-22 CHAMBERS
  - •• 5.5' (180 mm) WIDTH FOR C-10 CHAMBERS
  - •• 5.0' (150 mm) WIDTH FOR M-6 CHAMBERS
- SEE ACCESS DETAIL FOR TRITON HEADER ROW ACCESS

	MAX DIAMETER FOR CONNECTOR PIPE	CHAMBER SPACING
S29	18" (450mm)	6.0" (150mm) *7.5" (190mm)
S22	18" (450mm)	6" (150mm)
C10	12" (300mm)	6" (150mm)
M6	8" (200mm)	6" (150mm)

*7.5" (190mm) SPACING OF DISTRIBUTION ROWS IS REQUIRED ONLY WHEN A PERPENDICULAR MAIN HEADER ROW IS USED. IF AN INLINE MAIN HEADER ROW IS USED, THEN MIN SPACING CAN BE 6" (150mm)

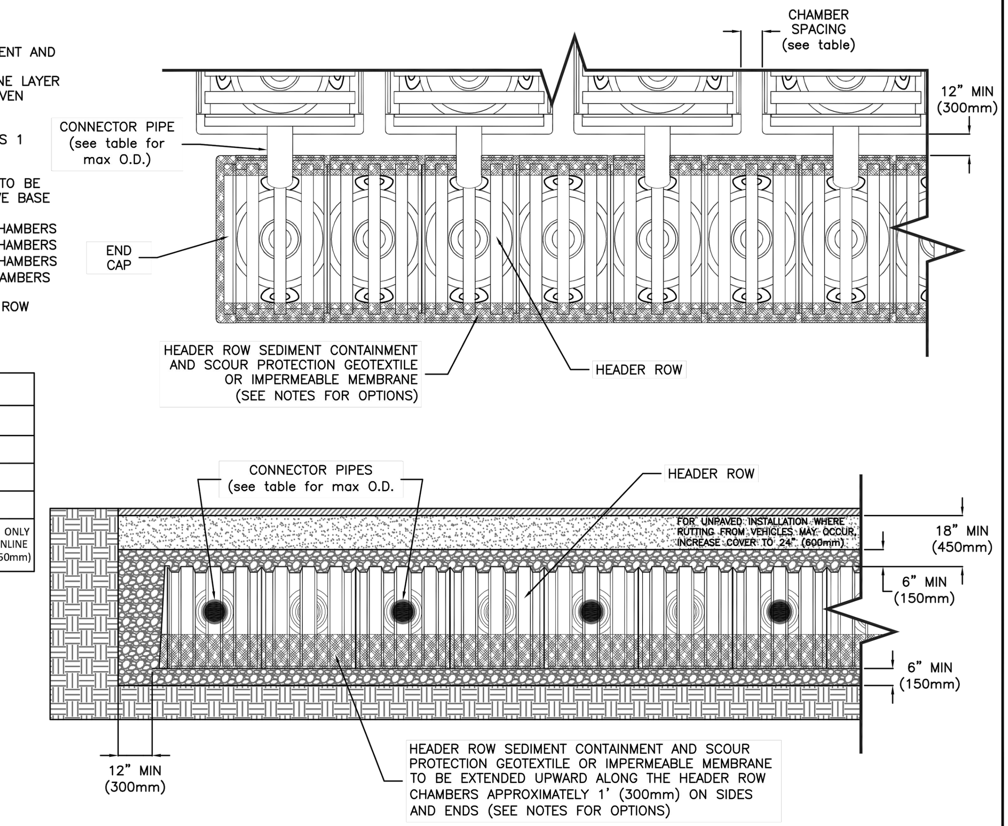

CONCEPTUAL PLAN DISCLAIMER
THIS GENERIC DETAIL DOES NOT ENCOMPASS THE SIZING, FIT, AND APPLICABILITY OF THE TRITON CHAMBER SYSTEM FOR THIS SPECIFIC PROJECT. IT IS THE ULTIMATE RESPONSIBILITY OF THE DESIGN ENGINEER TO ASSURE THAT THE STORMWATER SYSTEM DESIGN IS IN FULL COMPLIANCE WITH ALL APPLICABLE LAWS AND REGUALTIONS. TRITON PRODUCTS MUST BE DESIGNED AND INSTALLED IN ACCORDANCE WITH TRITON'S MINIMUM REQUIREMENTS. TRITON STORMWATER SOLUTIONS DOES NOT APPROVE PLANS, SIZING, OR SYSTEM DESIGNS. THE DESIGN ENGINEER IS RESPONSIBLE FOR ALL DESIGN DECISIONS.

7600 EAST GRAND RIVER, STE.195
BRIGHTON, MI 48114
PHONE: (810) 222-7652 • FAX: (810) 222-1769
WWW.TRITONSWS.COM

TRITON MAIN HEADER ROW

TRITON - STANDARD DETAILS — REVISED: 01-28-16 JWM

NOTES:
1. PIPE/MANHOLE CONNECTIONS TO BE GROUTED.
2. PIPE/CHAMBER CONNECTIONS PER LATEST INSTALLATION INSTRUCTIONS.

MAX PIPE DIAMETER, D (IN.):
- S-29 CHAMBERS = 24" (610mm)
- S-22 CHAMBERS = 24" (610mm)
- C-10 CHAMBERS = 18" (450mm)
- M-6 CHAMBERS = 12" (300mm)

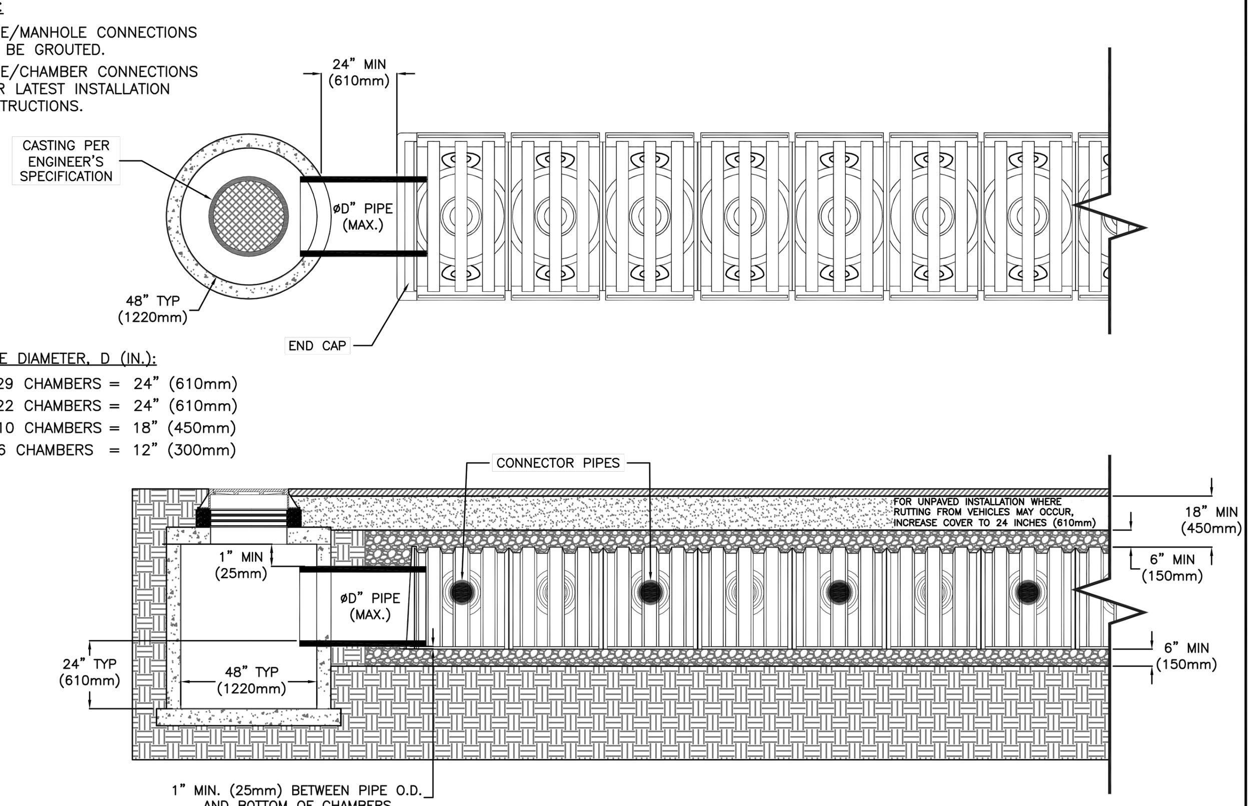

CONCEPTUAL PLAN DISCLAIMER
THIS GENERIC DETAIL DOES NOT ENCOMPASS THE SIZING, FIT, AND APPLICABILITY OF THE TRITON CHAMBER SYSTEM FOR THIS SPECIFIC PROJECT. IT IS THE ULTIMATE RESPONSIBILITY OF THE DESIGN ENGINEER TO ASSURE THAT THE STORMWATER SYSTEM DESIGN IS IN FULL COMPLIANCE WITH ALL APPLICABLE LAWS AND REGUALTIONS. TRITON PRODUCTS MUST BE DESIGNED AND INSTALLED IN ACCORDANCE WITH TRITON'S MINIMUM REQUIREMENTS. TRITON STORMWATER SOLUTIONS DOES NOT APPROVE PLANS, SIZING, OR SYSTEM DESIGNS. THE DESIGN ENGINEER IS RESPONSIBLE FOR ALL DESIGN DECISIONS.

7600 EAST GRAND RIVER, STE.195
BRIGHTON, MI 48114
PHONE: (810) 222-7652 • FAX: (810) 222-1769
WWW.TRITONSWS.COM

HEADER ROW ACCESS
STANDARD MH CONNECTION

TRITON - STANDARD DETAILS — REVISED: 01-28-16 JWM

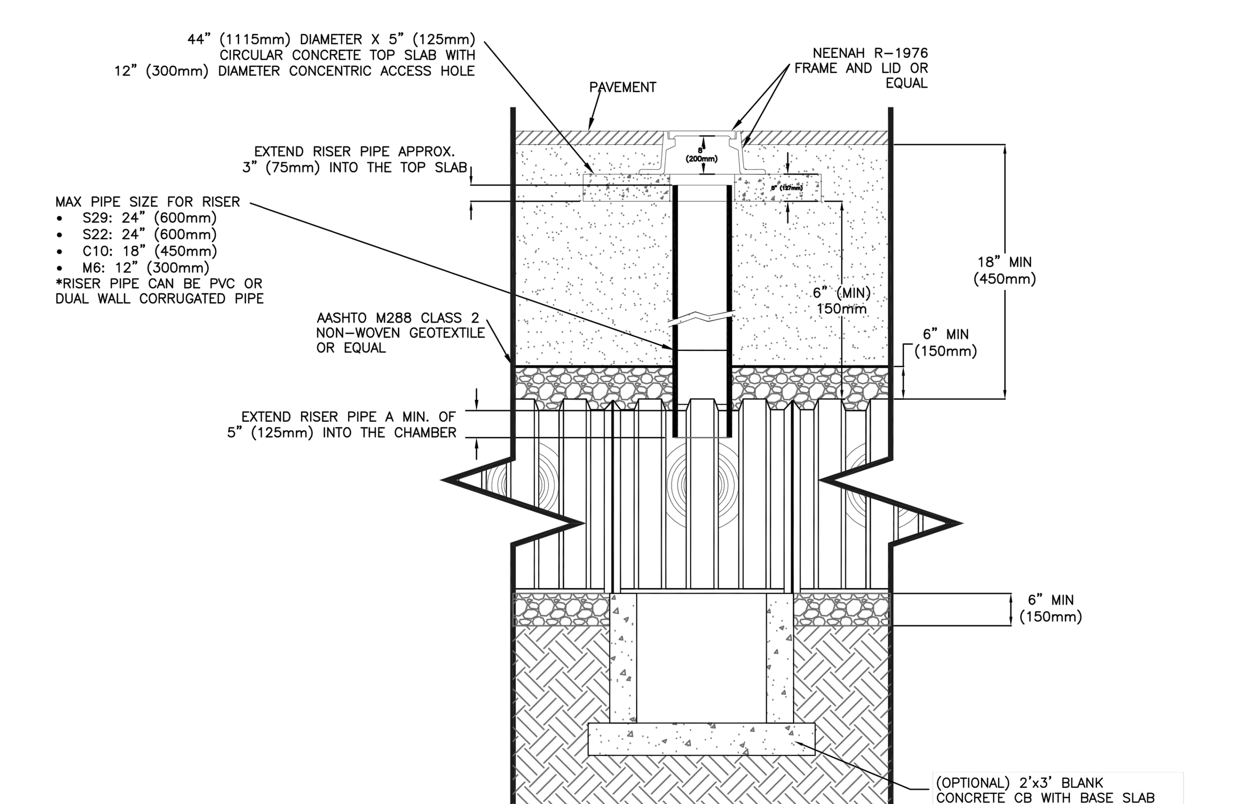

NOTES:
1. CONNECT RISER TO CHAMBER PER LATEST INSTALLATION INSTRUCTIONS

CONCEPTUAL PLAN DISCLAIMER
THIS GENERIC DETAIL DOES NOT ENCOMPASS THE SIZING, FIT, AND APPLICABILITY OF THE TRITON CHAMBER SYSTEM FOR THIS SPECIFIC PROJECT. IT IS THE ULTIMATE RESPONSIBILITY OF THE DESIGN ENGINEER TO ASSURE THAT THE STORMWATER SYSTEM DESIGN IS IN FULL COMPLIANCE WITH ALL APPLICABLE LAWS AND REGUALTIONS. TRITON PRODUCTS MUST BE DESIGNED AND INSTALLED IN ACCORDANCE WITH TRITON'S MINIMUM REQUIREMENTS. TRITON STORMWATER SOLUTIONS DOES NOT APPROVE PLANS, SIZING, OR SYSTEM DESIGNS. THE DESIGN ENGINEER IS RESPONSIBLE FOR ALL DESIGN DECISIONS.

7600 EAST GRAND RIVER, STE.195
BRIGHTON, MI 48114
PHONE: (810) 222-7652 • FAX: (810) 222-1769
WWW.TRITONSWS.COM

TRITON TOP ACCESS
SMALL DIAMETER CONNECTION

TRITON - STANDARD DETAILS — REVISED: 01-28-16 JWM

TRITON S-29 PRODUCT SPECIFICATIONS

1.0 General

1.1 Triton chambers are designed to control stormwater runoff. As a subsurface retention or detention system, Triton chambers retain and allow effective infiltration of water into the soil. As a subsurface detention system, Triton chambers detain and allow for the metered flow of water to an outfall.

2.0 Chamber Parameters

2.1 The chamber shall be injection compression molded of a structural grade 1010 green soy resin composite to be inherently resistant to environmental stress cracking (ESCR), creep, and to maintain proper stiffness through temperature ranges of -40 degrees Fahrenheit to 180 degrees Fahrenheit (-40 degrees Celsius to 82.2 degrees Celsius).

2.2 The material property for the chamber and end cap must meet or exceed the following:
Tensile Strength- Ultimate: 21,755 PSI (150 Mpa)
Tensile Strength-Yield: 17,404 PSI (120 Mpa)
Tensile Modulus: 1,750-2,240 KSI (12,066 Mpa - 15,444 Mpa)
Flex Modulus: 1,600 KSI (11,032 Mpa)
Flex Yield Strength: 33,100 PSI (228 Mpa)
Compressive Strength: 30,457 PSI (210 Mpa)
Shear Strength: 11,500 PSI (79 Mpa)

2.3 The nominal chamber dimensions of the Triton S-29 shall be 36.0 inches tall (914 millimeters), 59.0 inches wide (1499 millimeters) and 35.36 inches long (898 millimeters). Lay-up length is 33.35 inches (847 millimeters).

2.4 The chamber shall have an elliptical curved section profile.

2.5 The chamber shall be open-bottomed.

2.6 The chamber shall incorporate an overlapping corrugation joint system to allow chamber rows to be constructed.

2.7 The nominal storage volume of a Triton S-29 chamber shall be 41.05 cubic feet (1.162 cubic meters) per chamber when installed per Triton's typical details. This equates to 2.67 cubic feet (0.075 cubic meters) of storage per square foot of bed. This does not include perimeter stone.

2.8 The chamber shall have both of its ends open to allow for unimpeded hydraulic flows and visual inspections down a row's entire length.

2.9 The chamber shall have five corrugations to achieve strengths defined above.

2.10 The chamber shall have five circular and elliptical, indented and raised, surfaces on the top to the chamber for a maximum of 24 inch (610 millimeter) diameter optional top feed inlets, inspection ports and/or clean-out access ports.

2.11 The chamber shall have five elliptical, indented, surfaces on either side of the chamber for optional feed inlets, outlets. Capable of accepting pipe O.D. up to 18 inches (450 millimeters).

2.12 The chamber shall be analyzed, designed and field tested using AASHTO LRFD bridge design specifications 1. Design live load shall meet or exceed the AASHTO HS30 or a rear axle load of 48,000 pounds (21,772.4 kg). Design shall consider earth and live loads without pavement as appropriate for the minimum 18 inches (457 millimeters) of total cover to a maximum total cover of 50 feet (15.24 meters).

2.13 The chamber shall be manufactured in an ISO 9001:2008 certified facility

2.14 The service life of the product is over 60 years under a constant sustained load of 10,000 PSI (68.95 Mpa) which is equal to the H-20 loading condition. Under typical loading conditions the Chamber and End Cap has a useful life span of 120 years from date of when manufactured.

3.0 End Cap Parameters

3.1 The end cap shall be Injection Compression molded of 1010 green soy resin to be inherently resistant to environmental stress cracking (ESCR), creep and to maintain proper stiffness through temperature ranges of -40 degrees Fahrenheit to 180 degrees Fahrenheit (-40 degrees Celsius to 82.2 degrees Celsius).

3.2 The end cap shall be designed to fit over the last corrugation of a chamber, which allows: the capping of each end of the chamber row.

3.3 The end cap shall have six upper saw guides capable of accepting pipe O.D. up to 17.81 inches (452 millimeters), five middle saw guides capable of accepting pipe O.D. up to 15.99 inches (406mm) and eight lower saw guides capable of accepting pipe O.D. up to 27.92 inches (709 millimeters) to allow easy cutting for various diameters of pipe that may be used to inlet or outlet the system. See end cap detail for further details.

3.4 The end cap shall have excess structural adequacies to allow cutting an orifice of any size at any invert elevation.

3.5 The primary face of an end cap shall have five corrugations and be angled outward to resist horizontal loads generated near the edges of beds.

3.6 The end cap shall be manufactured in an ISO 9001:2008 certified facility.

3.7 The service life of the product to be over 60 years under a sustained load of 10,000 PSI (68.95 Mpa) which is equal to the H-20 loading condition.

3.8 The nominal storage volume of a Triton S-29 end cap shall be 4.98 cubic feet (0.141 cubic meters) per end cap when installed per triton's typical details. This equates to 1.83 cubic feet (0.052 cubic meters) of storage per square foot of bed.

4.0 Installation

4.1 Installation shall be in accordance with the latest Triton Installation manual that can be downloaded from the Triton website: www.tritonsws.com/support/downloads

CONCEPTUAL PLAN DISCLAIMER
THIS GENERIC DETAIL DOES NOT ENCOMPASS THE SIZING, FIT, AND APPLICABILITY OF THE TRITON CHAMBER SYSTEM FOR THIS SPECIFIC PROJECT. IT IS THE ULTIMATE RESPONSIBILITY OF THE DESIGN ENGINEER TO ASSURE THAT THE STORMWATER SYSTEM DESIGN IS IN FULL COMPLIANCE WITH ALL APPLICABLE LAWS AND REGUALTIONS. TRITON PRODUCTS MUST BE DESIGNED AND INSTALLED IN ACCORDANCE WITH TRITON'S MINIMUM REQUIREMENTS. TRITON STORMWATER SOLUTIONS DOES NOT APPROVE PLANS, SIZING, OR SYSTEM DESIGNS. THE DESIGN ENGINEER IS RESPONSIBLE FOR ALL DESIGN DECISIONS.

7600 EAST GRAND RIVER, STE.195
BRIGHTON, MI 48114
PHONE: (810) 222-7652 • FAX: (810) 222-1769
WWW.TRITONSWS.COM

S-29 PRODUCT SPECIFICATIONS

TRITON - STANDARD DETAILS — REVISED: 03-02-16 JWM

1 INFILTRATION STORAGE SYSTEM
(OTHER SYSTEMS PROVIDING THE FUNCTIONALITY MAY BE USED) NO SCALE

JLG architects
801 Washinton Ave. N. #120
Minneapolis, MN 55401
phone 612.746.4260
facsimile 612.746.4754
www.jlgarchitects.com
copyright © 2016

Élan DESIGN LAB
Civil Engineering | Landscape Architecture | Construction Services
901 N 3rd STREET, SUITE 120
MINNEAPOLIS, MN 55401
p 612.260.7980
f 612.260.7990
www.elanlab.com

CERTIFICATION
I hereby certify that this plan was prepared by me, or under my direct supervision, and that I am a duly Licensed Professional Engineer under the laws of the state of MINNESOTA.
Stephen M. Johnston
REGISTRATION NO. 18914
DATE 07/12/16

PRELIMINARY
NOT FOR CONSTRUCTION

REVISION SCHEDULE		
NO.	DESCRIPTION	DATE

CLIENT
PHILLIPS COMMUNITY CENTER AQUATICS FACILITY
Minneapolis, MN

DATE 07/12/16
PHASE PDR RESUBMITTAL
PROJECT 16076
SHEET C503
DETAILS

6/13/2016 9:29:56 AM

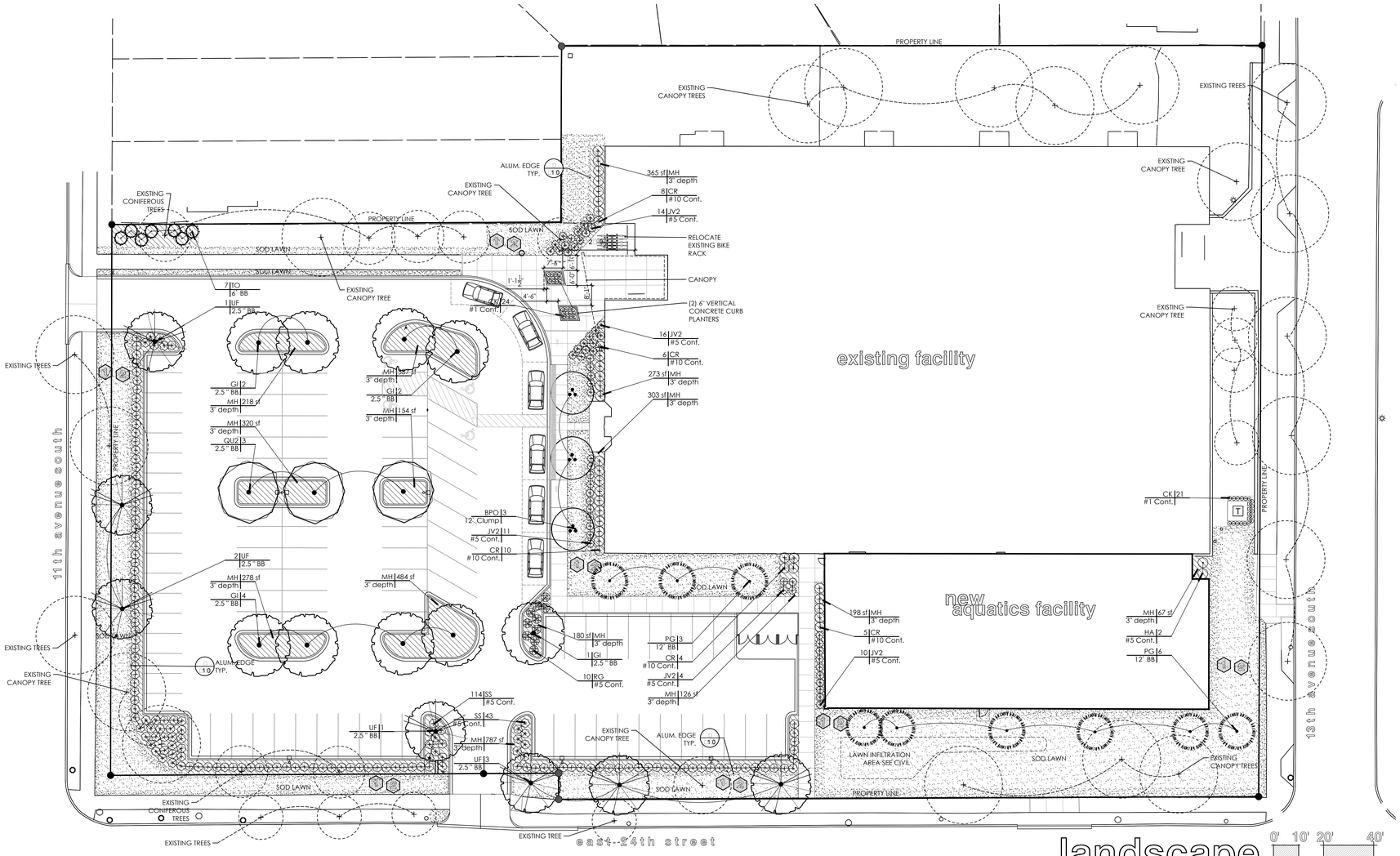

REFER TO CIVIL FOR GRADING, LAYOUT, STORMWATER, UTILITIES AND PAVEMENT DETAILS

landscape calculations

CITY OF MINNEAPOLIS

SITE AREA:	122,331 SF
BUILDING AREA:	47,698 SF
SITE AREA LESS BUILDING AREA:	74,633 SF
20% RESIDUAL SITE AREA:	14,927 SF
CANOPY TREES REQUIRED:	14,927 / 500 = 30 CANOPY TREES LESS 9 EXISTING CANOPY TREES = 21 CANOPY TREES REQUIRED / 22 CANOPY TREES PROVIDED
SHRUBS REQUIRED:	14,927 / 100 = 149 SHRUBS REQUIRED
SCREENING REQUIRED:	PARKING LOT SCREENING REQUIRED 60% OPACITY TO A 3' HT. + 1 CANOPY TREE PER 25' OF FRONTAGE
PARKING LOT TREES REQUIRED:	LOTS OF 10 OR MORES SPACES REQUIRE TREES NOT LESS THAN 50' O.C.

key notes

1. PLANTING AREAS:
LANDSCAPE EDGING SHALL BE 4" ALUMINUM MILL FINISH WITH ALUMINUM STAKES. THERE ARE TWO TYPES OF LANDSCAPE MULCH IDENTIFIED ON THE PLAN.
PLANTING BEDS SHALL BE HARDWOOD SHREDDED MULCH. APPLY TO A 3" DEPTH WITH PELLET WEED PREVENTER UNDER ALL PLANTING BEDS. MULCH IS IDENTIFIED AS DIAGONAL HATCH ON THE PLANS

2. IRRIGATION: PROVIDE IRRIGATION FOR LANDSCAPE AND SOD AREAS FOR 100 % COVERAGE. REFER TO DESIGN BUILD IRRIGATION SPECIFICATION. PROVIDE SHOP DRAWING FOR IRRIGATION SYSTEM INCLUDING HEAD LAYOUT, SPACING, TYPE, BACKFLOW PREVENTER LOCATIONS, POINT OF CONNECTION, SLEEVES, CONTROLLER, VALVE BOX LOCATIONS, ZONE INDICATIONS AND PIPE SIZING. PROVIDE ON-SITE OPERATION TUTORIAL FOR OWNER AN INCLUDE ALL MANUALS AND INFORMATION ON THE SYSTEM

planting notes

1. CONFIRM ALL QUANTITIES, SHAPES AND LOCATIONS OF BEDS, AND ADJUST AS REQUIRED TO CONFORM TO THE SITE CONDITIONS. CONFIRM ANY ADJUSTMENTS WITH THE LANDSCAPE ARCHITECT.
2. LOCATE ALL UTILITIES. NOTIFY THE LANDSCAPE ARCHITECT OF ANY CONFLICTS WITH NEW CONSTRUCTION.
3. THE CONTRACTOR SHALL REMOVE FROM THE SITE ALL SOD/TURF WHICH HAS BEEN REMOVED FOR NEW PLANT BEDS. ANY PLANT STOCK NOT PLANTED ON DAY OF DELIVERY SHALL BE HEELED IN AND WATERED UNTIL INSTALLATION. PLANTS NOT MAINTAINED IN THIS MANNER WILL BE REJECTED.
4. THE PLAN TAKES PRECEDENCE OVER THE PLANT SCHEDULE IF DISCREPANCIES EXIST. ADVISE LANDSCAPE ARCHITECT OF ANY DISCREPANCIES.
5. THE CONTRACTOR SHALL AVOID DAMAGING EXISTING TREES. DO NOT STORE OR DRIVE HEAVY MATERIALS OVER TREE ROOTS. DO NOT DAMAGE TREE BARK OR BRANCHES.
6. THE CONTRACTOR SHALL KEEP PAVEMENTS, FIXTURES AND BUILDINGS CLEAN AND UNSTAINED. ANY DAMAGE TO EXISTING FACILITIES SHALL BE REPAIRED AT THE CONTRACTOR'S EXPENSE. THE PROJECT SITE SHALL BE KEPT CLEAR OF CONSTRUCTION WASTES AND DEBRIS.
7. THE LANDSCAPE CONTRACTOR SHALL BE RESPONSIBLE FOR PLANTING SOIL QUANTITIES TO COMPLETE THE WORK SHOWN ON THE PLAN. MULCH, PLANTING SOIL AND OTHER MISCELLANEOUS PLANTING COMPONENTS SHALL BE CONSIDERED INCIDENTAL TO THE RELATED PLAN. VERIFY ALL QUANTITIE.
8. CONTRACTOR IS RESPONSIBLE FOR WATERING AND ALL PLANT CARE UNTIL FINAL ACCEPTANCE BY THE OWNER.
9. PLANT MATERIAL SHALL BE PROTECTED AND MAINTAINED UNTIL THE INSTALLATION OF PLANTINGS IS COMPLETE. INSPECTION HAS BEEN MADE AND PLANTING IS ACCEPTED EXCLUSIVE OF THE GUARANTEE
10. MAINTENANCE SHALL INCLUDE WATERING, WEEDING, MULCHING, REMOVAL OF DEAD MATERIAL PRIOR TO GROWING SEASON, RE-SETTING PLANTS AND PROPER GRADE, AND KEEPING PLANTS IN A PLUMB POSITION. AFTER ACCEPTANCE, THE OWNER SHALL ASSUME MAINTENANCE RESPONSIBILITIES. HOWEVER, THE CONTRACTOR SHALL CONTINUE TO BE RESPONSIBLE FOR KEEPING THE TREES PLUMB THROUGHOUT THE GUARANTEE PERIOD.
11. WATERING: MAINTAIN A WATERING SCHEDULE WHICH WILL THOROUGHLY WATER ALL PLANTS ONCE A WEEK AND SOD EVERY OTHER DAY UNTIL ACCEPTANCE BY THE OWNER. IN EXTREMELY HOT, DRY WEATHER, WATER MORE OFTEN AS REQUIRED BY INDICATIONS OF HEAT STRESS SUCH AS WILTING LEAVES. CHECK MOISTURE UNDER MULCH PRIOR TO WATERING TO DETERMINE NEED. CONTRACTOR SHALL MAKE THE NECESSARY ARRANGEMENTS FOR WATER.

landscape plan

0' 10' 20' 40'

twenty

planting schedule

PLANTING:
REFER TO PAGE L1.0
DETAILS 1/L1.0; 2/L1.0, 3/L1.0

[illegible]	[illegible]	[illegible]	[illegible]	[illegible]
	[illegible]	[illegible]	12[illegible]	3
	[illegible]	[illegible]	2'-5" [illegible]	9
	[illegible]	[illegible]	12[illegible]	9
	[illegible]	[illegible]	2'-5" [illegible]	3
	[illegible]	[illegible]	6[illegible]	[illegible]
	[illegible]	[illegible]	2'-5" [illegible]	[illegible]
[illegible]	[illegible]	[illegible]	[illegible]	[illegible]
	[illegible]	[illegible]	[illegible]10 [illegible]	33
	[illegible]	[illegible]	[illegible]5 [illegible]	2
	[illegible]	[illegible]	[illegible]5 [illegible]	55
	[illegible]	[illegible]	[illegible]5 [illegible]	10
	[illegible]	[illegible]	[illegible]5 [illegible]	15[illegible]
[illegible]	[illegible]	[illegible]	[illegible]	[illegible]
	[illegible]	[illegible]	[illegible]5	
[illegible]	[illegible]	[illegible]	[illegible]	[illegible]
	M[illegible]	M[illegible]	3" d[illegible]	6[illegible]11 [illegible]
	[illegible]	[illegible]	[illegible]d	16.560 [illegible]

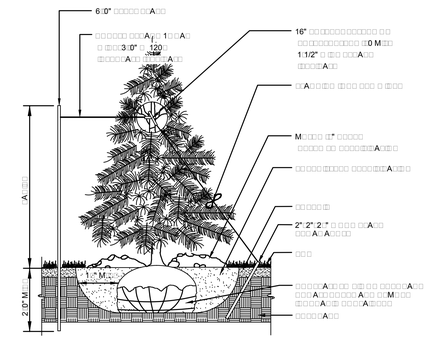

1 conifer planting
scale: nts

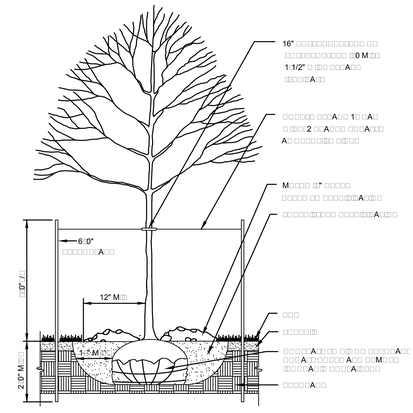

2 decid. planting
scale: nts

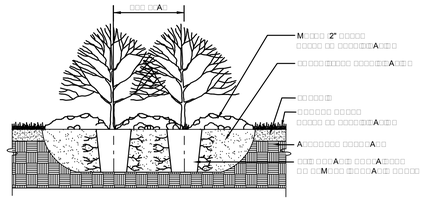

3 shrub planting
scale: nts

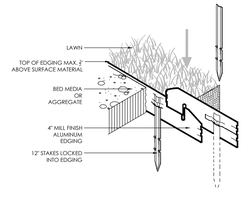

4 alum. edge
scale: nts

JLG architects
801 Washinton Ave. N. #120
Minneapolis, MN 55401
phone 612.746.4260
facsimile 612.746.4754
www.jlgarchitects.com

copyright © 2016

aune fernandez landscape architects
710 raymond avenue - suite 200
saint paul, mn 55114
651.246.5053 voice | 341.3611 fax

CERTIFICATION
I HEREBY CERTIFY THAT THIS PLAN, SPECIFICATION, OR REPORT WAS PREPARED BY ME OR UNDER MY DIRECT SUPERVISION AND THAT I AM A DULY LICENSED LANDSCAPE ARCHITECT UNDER THE LAWS OF THE STATE OF MINNESOTA.
DATE
0 DATE
REGISTRATION NO. 0 S.L.A.

PRELIMINARY
NOT FOR CONSTRUCTION

REVISION SCHEDULE

NO.	DESCRIPTION	DATE

PHILLIPS COMMUNITY CENTER AQUATICS FACILITY

CLIENT
PHILLIPS COMMUNITY CENTER
Minneapolis, MN

DATE
07/12/16

PHASE
PDR RESUBMITTAL

PROJECT
16076

SHEET
LANDSCAPE PLAN
L1.0

13/2016 9:29:56 AM

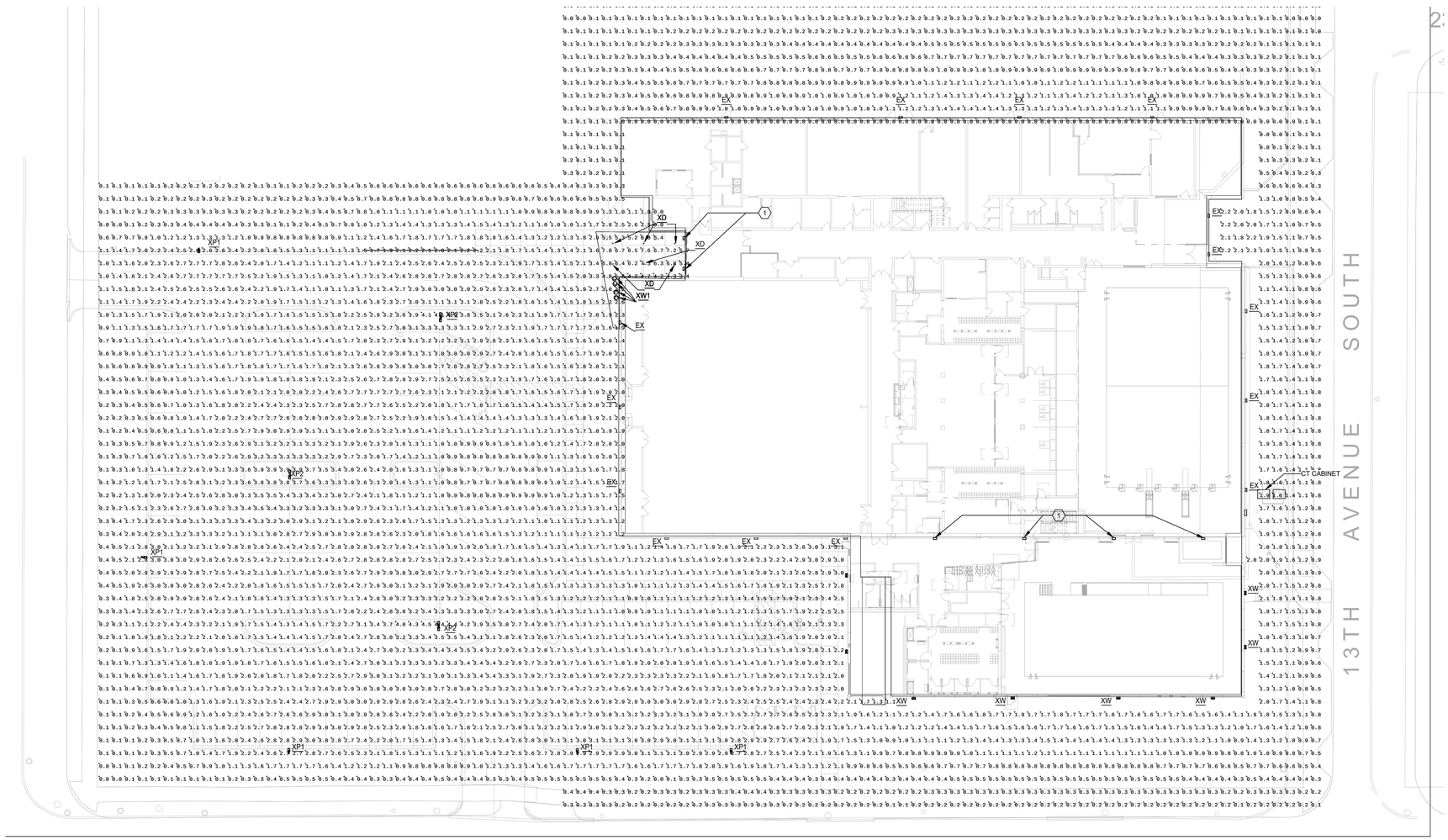

1 ELECTRICAL SITE PLAN WITH PHOTOMETRICS
E001 1" = 20'-0"

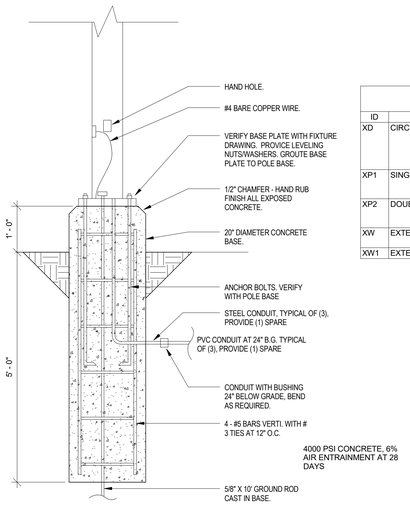

2 POLE BASE DETAIL
E001 NO SCALE

SITE LIGHT FIXTURE SCHEDULE

ID	FIXTURE TYPE	MOUNTING TYPE	VOLTAGE	LAMP	WATTAGE	DESCRIPTION	MANUFACTURER CATALOG NUMBER	NOTES
XD	CIRCULAR CANOPY DOWNLIGHT	SURFACE	277 V	LED, 4000K, 2000 LUMENS	20 VA	OPAL ACRYLIC LENS, 7" TO 12" DIAMETER SHALLOW SURFACE FIXTURE (1" TO 4" DEEP), WHITE TRIM, WET LOCATION	KENALL MR13FFL SERIES, FINISH TBD (BLACK, WHITE, DARK BRONZE)	
XP1	SINGLE HEAD SQUARE POLE MOUNTED LIGHT	POLE	480 V	60C LED, 4000K	131 VA	TYPE 3 MEDIUM DISTRIBUTION; 30' ALUMINUM POLE, FINISH TBD	LITHONIA D-SERIES DSX1	
XP2	DOUBLE HEAD SQUARE POLE MOUNTED LIGHT	POLE	480 V	60C LED, 4000K	262 VA	TYPE 3 MEDIUM DISTRIBUTION; 30' ALUMINUM POLE, FINISH TBD	LITHONIA D-SERIES DSX1	
XW	EXTERIOR WALL SCONCE	WALL	277 V	1 LIGHT BAR LED	25 VA	MCGRAW EDISON	IST-E01-LED-E1-BL3-BK-7030-CWB-277	
XW1	EXTERIOR ACCENT LIGHT			LED	60 VA			

GENERAL NOTES

A. CIRCUIT ALL ELECTRICAL DEVICES ON THIS PLAN TO PANEL HP1 UNLESS NOTED OTHERWISE.

B. COORDINATE WITH LANDSCAPE FOR EXACT LIGHT FIXTURE LOCATIONS.

C. EXTERIOR LIGHTING TO BE CONTROLLED BY PHOTOCELL/TIMECLOCK. SEE ARCHITECTURAL ELEVATIONS FOR EXACT LOCATIONS.

D. SEE LIGHT FIXTURE SCHEDULE ON THIS SHEET.

KEYNOTES

1. DISCONNECT & REMOVE EXISTING WALL MOUNTED LIGHTING.

Minneapolis
Park & Recreation Board

Phillips Community Center Aquatics Facility
2323 11th Avenue South
Minneapolis, MN 55404
T: 763.367.7600

PROJECT DIRECTORY:

STUDIO FIVE architects
322 First Avenue North, Suite 600
Minneapolis, MN 55401-1348
T: 612.339.0605

Nelson-Rudie Engineers
Mechanical, Electrical & Structural Engineering
9100 49th Ave. N.
Minneapolis, MN 55428
T: 763.367.7600

USAquatics
Aquatic Design Consultants
124 Bridge Ave. E.
Delano, MN 55328
T: 763.972.5897

Judd Allen Group
Thermal Modelling
6110 Blue Circle Dr. Ste. 239
Minnetonka, MN 55343
T: 952.224.5050

Elan Design Lab
Civil Engineers
901 North 3rd Street, Suite 120
Minneapolis, MN 55401
T: 612.260.7980

Aune Fernandez Landscape Architects
Landscape Architecture & Design
705 Raymond Ave. Suite 200
Saint Paul, MN 55114
T: 651.341.361

DOCUMENTS ISSUED:

NOT FOR CONSTRUCTION

REVISIONS:

#	DATE	DESCRIPTION

REGISTRATION:

I hereby certify that this plan, specification, or report was prepared by me or under my direct supervision and I am a duly Licensed Professional Engineer under the laws of the State of Minnesota.

Jeffrey A. Piehl
License No: 43926 Date: _____

ELECTRICAL SITE PLAN

COMM. NO:	15094
SCALE:	As indicated
DATE:	10/23/15
DRAWN:	PTL

E001

7/12/2016 4:58:39 PM

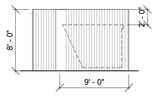

1 TRASH ENCLOSURE - EAST GLU
1/8" = 1'-0"

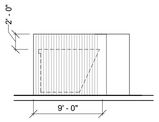

3 TRASH ENCLOSURE - WEST GLU
1/8" = 1'-0"

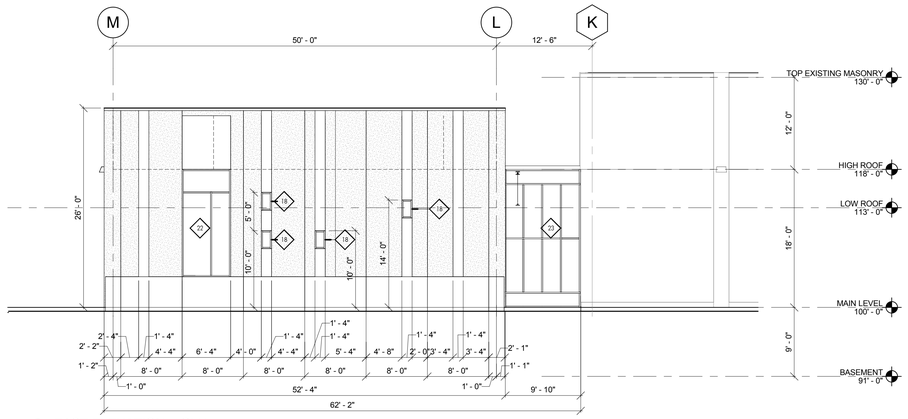

4 EAST ELEVATION - GLU
1/8" = 1'-0"

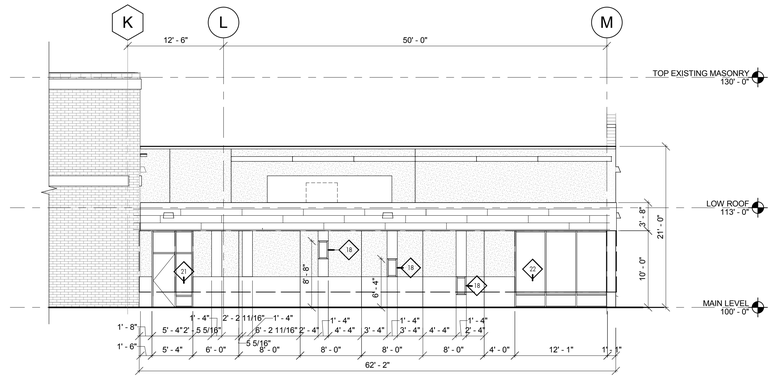

5 WEST ELEVATION - GLU
1/8" = 1'-0"

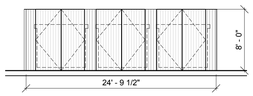

2 TRASH ENCLOSURE - SOUTH GLU
1/8" = 1'-0"

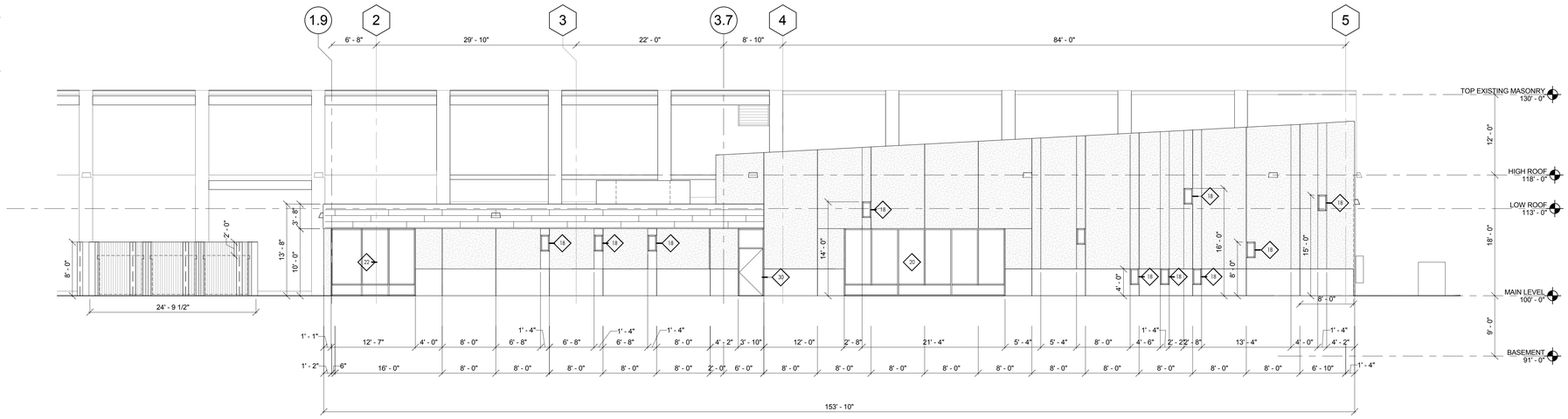

6 SOUTH ELEVATION - GLU
1/8" = 1'-0"

JLG
DESIGN FOR LIFE
801 Washinton Ave. N. #120
Minneapolis, MN 55401
phone 6 1 2 7 4 6 4 2 6 0
facsimile 6 1 2 7 4 6 4 7 5 4
www.jlgarchitects.com

copyright © 2016

PRELIMINARY
NOT FOR CONSTRUCTION

REVISION SCHEDULE

NO.	DESCRIPTION	DATE

MINNEAPOLIS PARKS
PHILLIPS COMMUNITY CENTER
Minneapolis, MN

DATE 07/12/16
PHASE
PROJECT 16076
SHEET L001
EXTERIOR ELEVATIONS

7/15/2016 8:45:51 AM

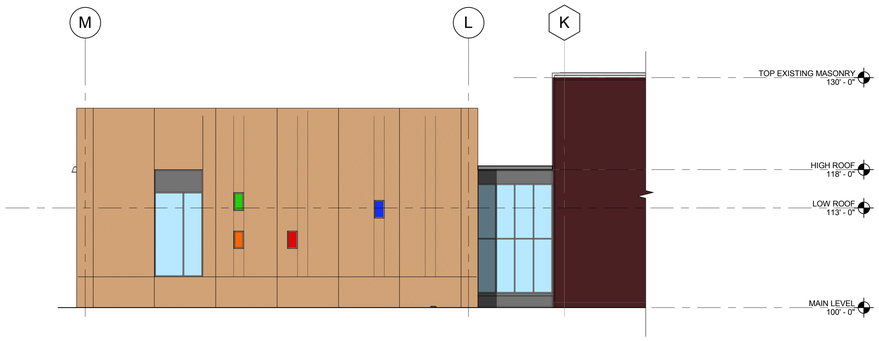

1 EAST COLORED ELEVATION
1/8" = 1'-0"

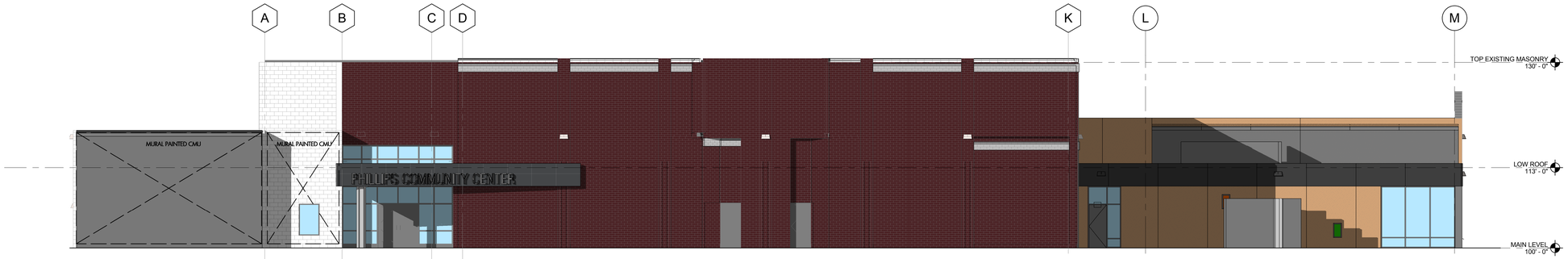

3 WEST COLORED ELEVATION
1/8" = 1'-0"

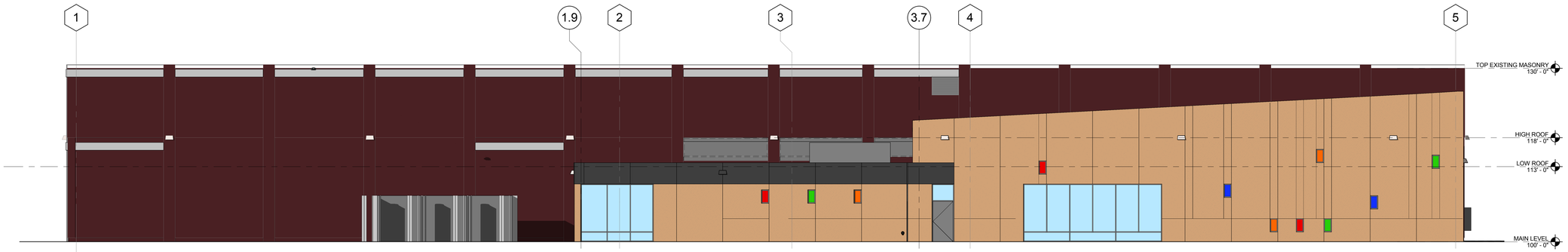

2 SOUTH COLORED ELEVATION
1/8" = 1'-0"

7/15/2016 8:46:16 AM

JLG
DESIGN FOR LIFE
801 Washinton Ave. N. #120
Minneapolis, MN 55401
phone 6 1 2 7 4 6 4 2 6 0
facsimile 6 1 2 7 4 6 4 7 5 4
www.jlgarchitects.com
copyright © 2016

PRELIMINARY
NOT FOR CONSTRUCTION

REVISION SCHEDULE

NO.	DESCRIPTION	DATE

MINNEAPOLIS PARKS
PHILLIPS COMMUNITY CENTER
Minneapolis, MN

DATE
07/12/16

PHASE

PROJECT
16076

SHEET
L002
COLORED ELEVATIONS & RENDERINGS

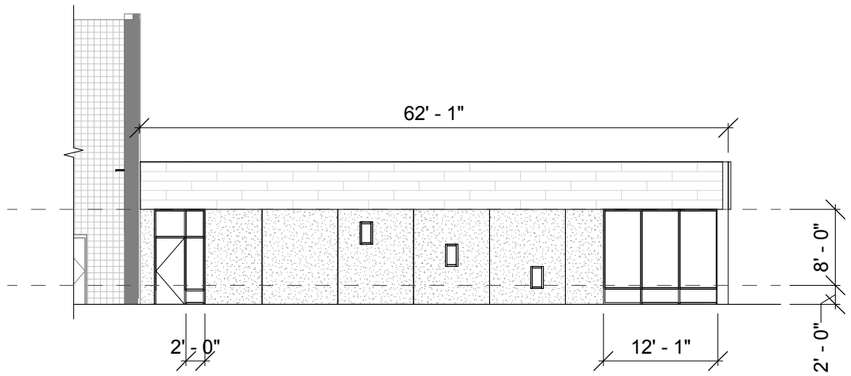

EAST ELEVATION NEW ADDITION: 933.9 SF
GLAZING & DOORS: 182.7 SF - 19.6% (182.7/933.9)
PERCENTAGE OF GLAZING 2'-10': 22.9%
WALL AREA W/O GLAZING & DOORS: 751.2 SF
METAL PANEL: 312.5 SF - 41.6% (312.5/751.2)
PRECAST CONCRETE PANEL: 438.7 - 58.4% (438.7/751.2)

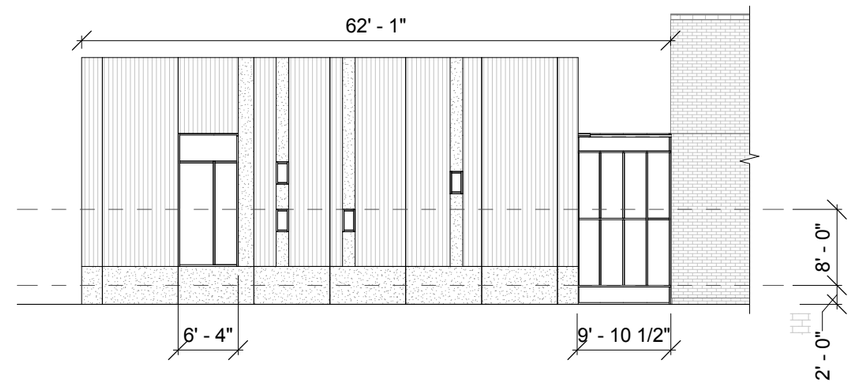

EAST ELEVATION NEW ADDITION: 1537.7 SF
GLAZING: 241.5 SF 15.7% (241.5/1537.7)
PERCENTAGE OF GLAZING 2'-10': 22.7%
WALL AREA MINUS GLAZING: 1296.2 SF
ALUMINUM INFILL PANEL: 35.8 SF - 2.8% (35.8/1296.2)
PRECAST CONCRETE PANEL: 1260.4 SF - 97.2% (1260.4/1296.2)

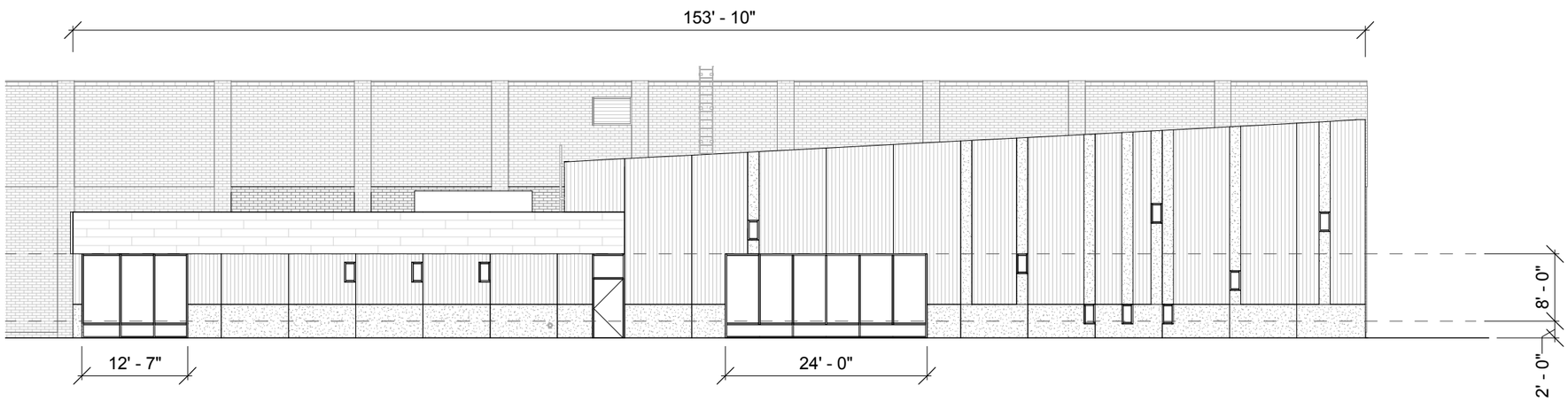

SOUTH ELEVATION (NEW ADDITION): 3119 SF
GLAZING & DOORS: 438.4 SF - 14.1% (438.4/3119)
PERCENTAGE OF GLAZING 2'-10': 24.7%
WALL AREA W/O GLAZING & DOORS: 2680.6 SF
METAL PANEL: 329.7 SF - 12.3% (438.4/2680.6)
PRECAST PANEL: 2350.9 SF - 87.7% (2350.9/2680.6)

EXTERIOR FINISH LEGEND

- RAKED FINISH PRECAST PANEL
- EXPOSED AGGREGATE PRECAST PANEL
- METAL PANEL

PHILLIPS COMMUNITY AQUATICS CENTER

EXTERIOR FINISHES

08/04/2016 | JLG 16076 | © 2016 JLG ARCHITECTS

0 8 16 32

JLG
DESIGN FOR LIFE

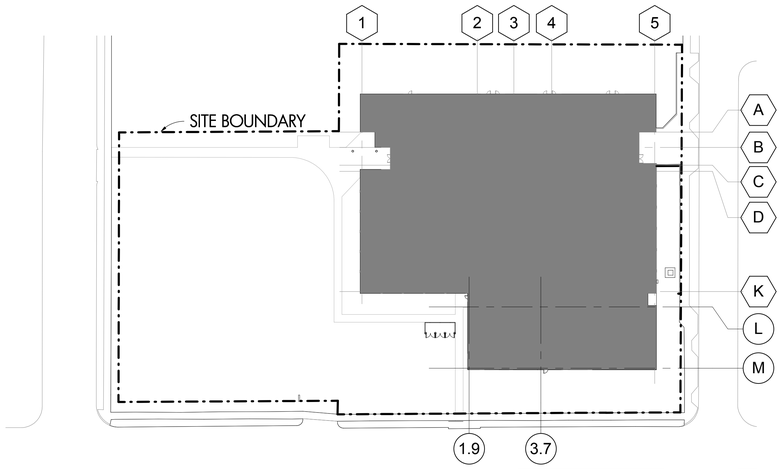

3 Site Plan
1" = 50'-0"

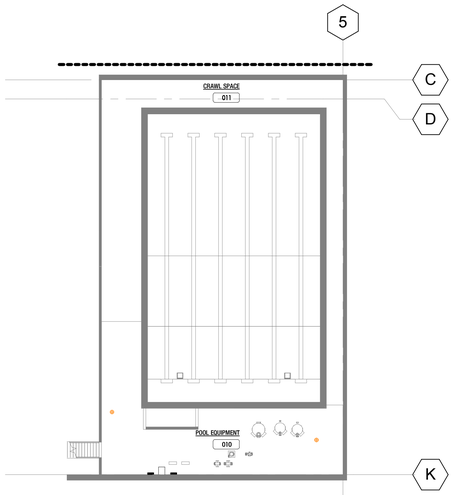

2 BASEMENT FLOOR PLAN
1/16" = 1'-0"

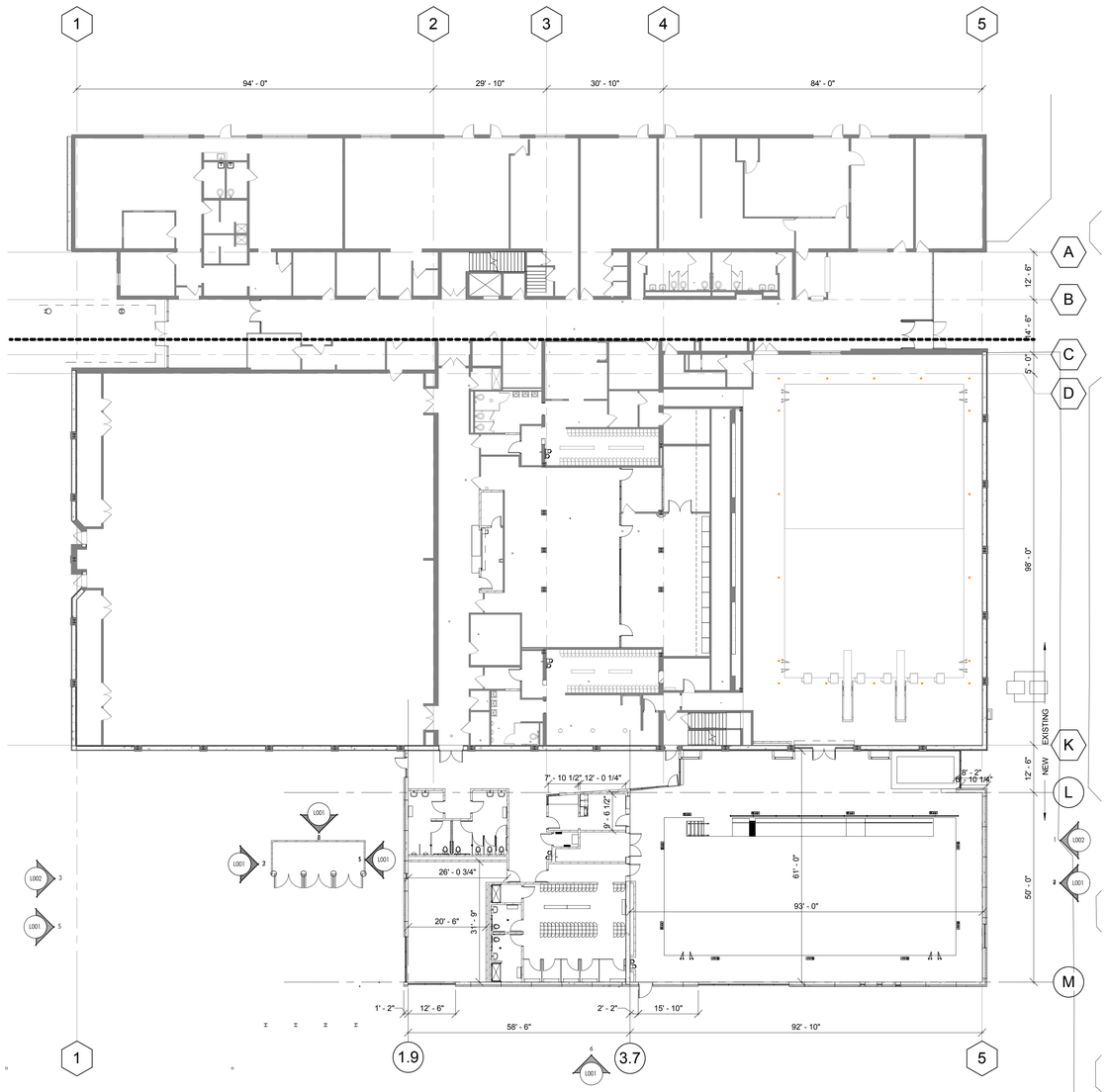

1 MAIN LEVEL FLOOR PLAN
1/16" = 1'-0"

7/15/2016 9:46:20 AM

JLG
DESIGN FOR LIFE

801 Washinton Ave. N. #120
Minneapolis, MN 55401
phone 6 1 2 7 4 6 4 2 6 0
facsimile 6 1 2 7 4 6 4 7 5 4
www.jlgarchitects.com
copyright © 2016

PRELIMINARY
NOT FOR CONSTRUCTION

REVISION SCHEDULE

NO.	DESCRIPTION	DATE

MINNEAPOLIS PARKS
PHILLIPS COMMUNITY CENTER
Minneapolis, MN

DATE
07/12/16

PHASE

PROJECT
16076

SHEET
L003
MAIN FLOOR PLAN

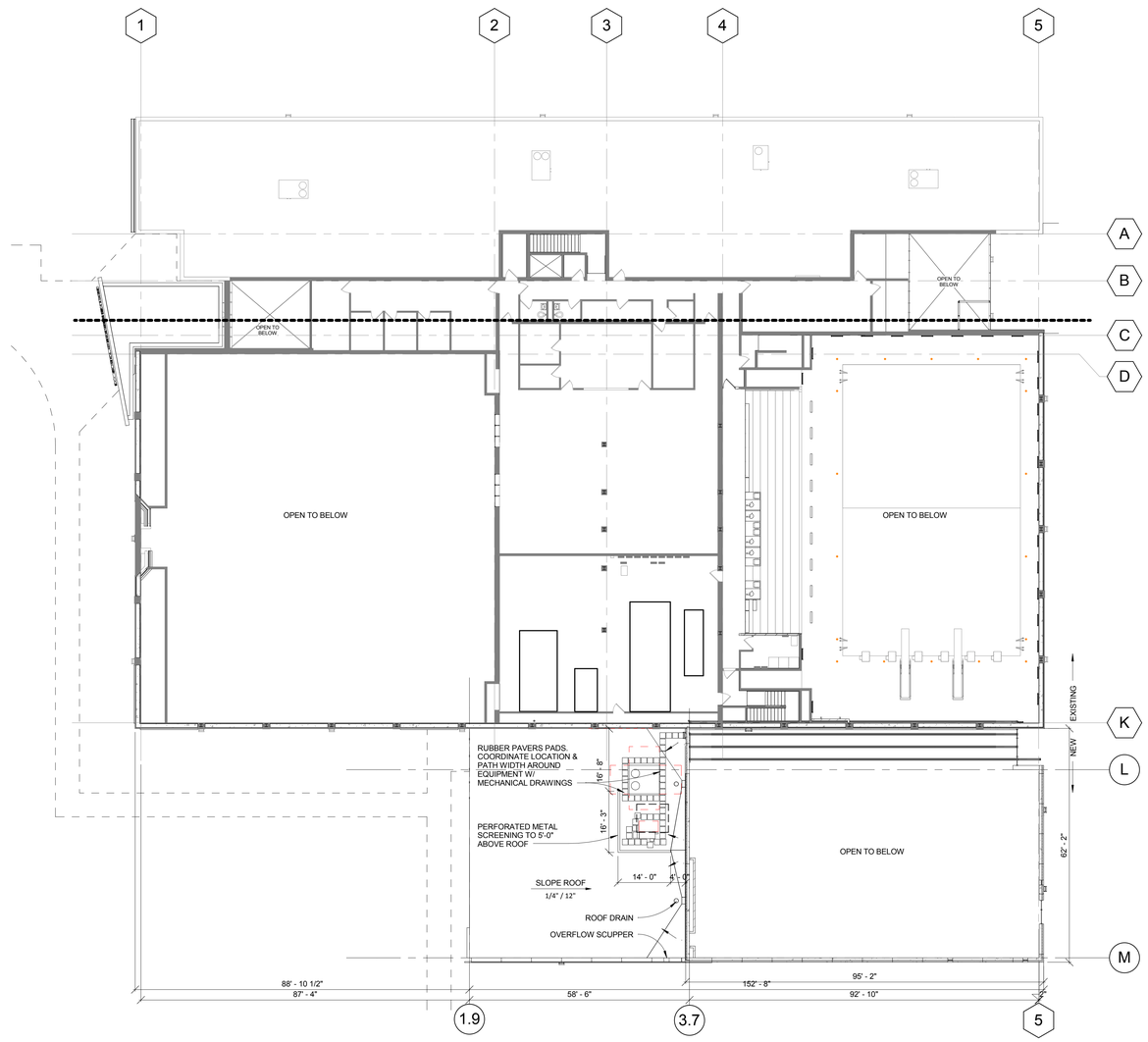

1 UPPER LEVEL FLOOR PLAN
1/16" = 1'-0"

JLG
DESIGN FOR LIFE
801 Washinton Ave. N. #120
Minneapolis, MN 55401
phone 6 1 2 7 4 6 4 2 6 0
facsimile 6 1 2 7 4 6 4 7 5 4
www.jlgarchitects.com

copyright © 2016

PRELIMINARY
NOT FOR CONSTRUCTION

REVISION SCHEDULE

NO.	DESCRIPTION	DATE

MINNEAPOLIS PARKS
PHILLIPS COMMUNITY CENTER
Minneapolis, MN

DATE
07/12/16

PHASE

PROJECT
16076

SHEET
L004
UPPER FLOOR PLAN

7/15/2016 8:46:21 AM

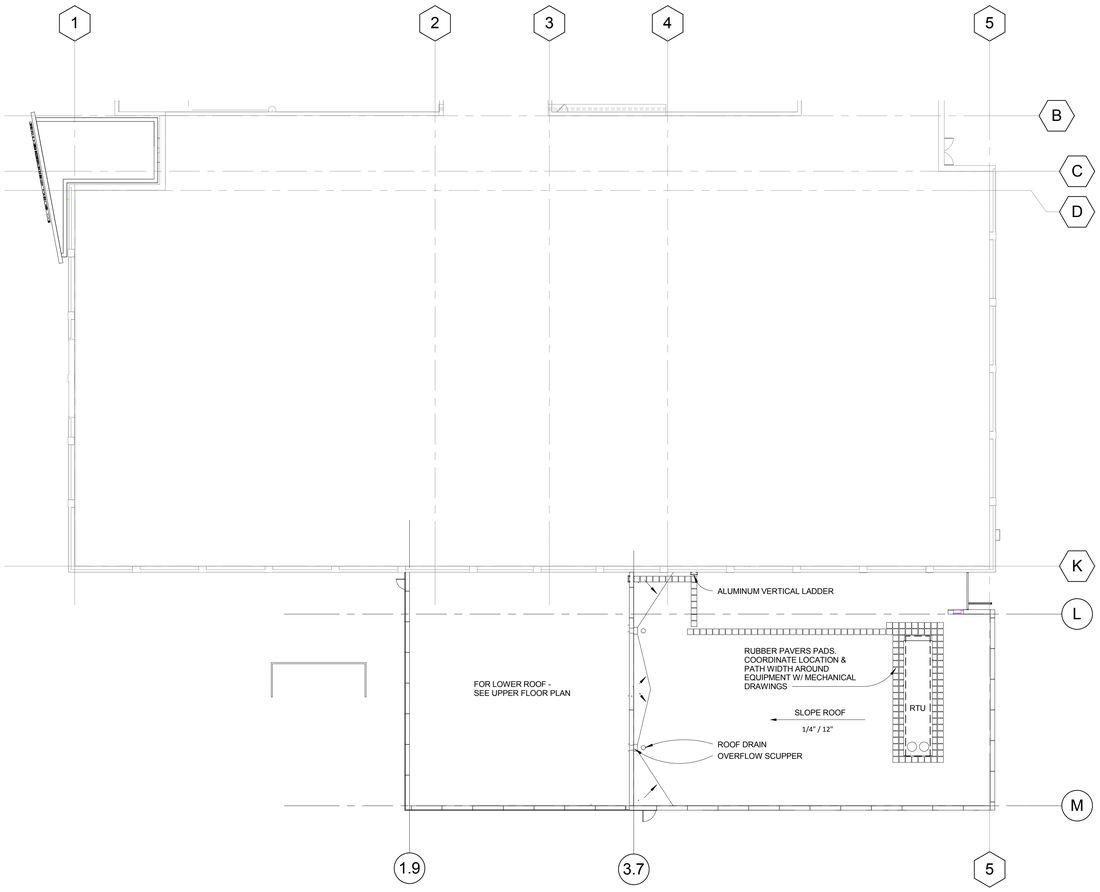

1 ROOF PLAN - GLU
1/16" = 1'-0"

JLG
DESIGN FOR LIFE
801 Washinton Ave. N. #120
Minneapolis, MN 55401
phone 6 1 2 7 4 6 4 2 6 0
facsimile 6 1 2 7 4 6 4 7 5 4
www.jlgarchitects.com

copyright © 2016

PRELIMINARY
NOT FOR CONSTRUCTION

REVISION SCHEDULE

NO.	DESCRIPTION	DATE

MINNEAPOLIS PARKS
PHILLIPS COMMUNITY CENTER
Minneapolis, MN

DATE
07/13/16

PHASE

PROJECT
16076

SHEET
L005
ROOF PLAN

7/15/2016 8:46:22 AM

WAITE HOUSE SIGN: 16.7 sf
NEW SIGNAGE: 47 sf

TOTAL SIGNAGE: 63.7 sf

*MONUMENT SIGN - SEE PG. 17 OF THE STATEMENT OF PROPOSED USE

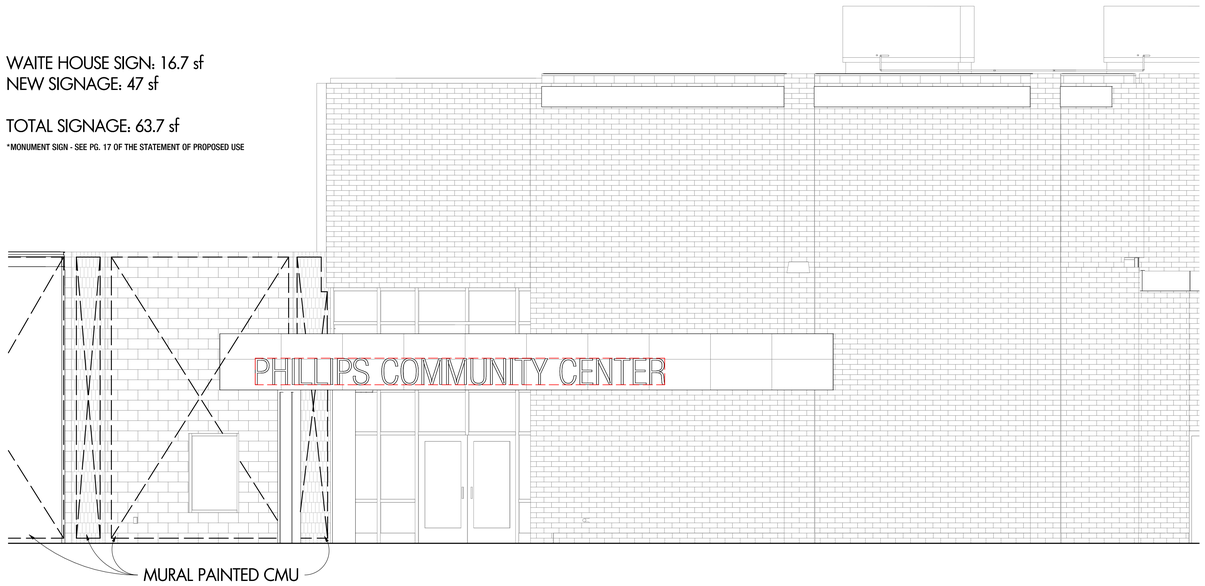

1 SIGNAGE @ CANOPY
1/4" = 1'-0"

JLG
DESIGN FOR LIFE
801 Washinton Ave. N. #120
Minneapolis, MN 55401
phone 6 1 2 7 4 6 4 2 6 0
facsimile 6 1 2 7 4 6 4 7 5 4
www.jlgarchitects.com
copyright © 2016

PRELIMINARY
NOT FOR CONSTRUCTION

REVISION SCHEDULE

NO.	DESCRIPTION	DATE

MINNEAPOLIS PARKS
PHILLIPS COMMUNITY CENTER
Minneapolis, MN

DATE
07/12/16

PHASE

PROJECT
16076

SHEET
L006
SIGNAGE

7/15/2016 8:46:23 AM

Minneapolis
Park & Recreation Board

Administrative Offices
2117 West River Road
Minneapolis, MN 55411-2227

Operations Center
3800 Bryant Avenue South
Minneapolis, MN 55409-1000

Phone
612-230-6400
Fax
612-230-6500

www.minneapolisparks.org

July 18, 2016

Adbi Warsame, Council Member
Minneapolis City Hall, Room 307
350 South 5th Street
Minneapolis, MN 55415

Re: Phillips Community Center Aquatics Facility – Proposed Project

Dear Council Member Warsame:

The Minneapolis Park and Recreation Board (MPRB) is proposing a renovation and addition for a new aquatics facility at the Phillips Community Center located at 2323 11th Avenue South. This project is a result of a great deal of community involvement thus far and is financially supported from the State of Minnesota, MPRB, Hennepin County, Minneapolis Public Schools, the 20-year Closing the Gap funding, the immediate neighborhood organizations, and multiple other funders coordinated by Minneapolis Swims. The project budget totals $6,116,000.

The existing pool in the Phillips Community Center was closed in 2008. The renovation and addition of the Phillips Community Center Aquatics Facility will result in two pools that can serve a variety of needs, from learn-to-swim programs to aquatics recreation for all ages to competitive swim meets.

Renovated space in the existing Phillips Community Center proposed:

- Renovation of the existing 6-lane pool and natatorium,
- Renovation of the abandoned locker and shower facilities,
- Restoration of the original spectator seating area

The new addition proposes:

- 4-lane teaching pool with ramped entry and infrastructure to support a future spa/hot tub,
- Two locker/changing rooms to serve a variety of needs from general locker rooms to families to swim teams,
- Reception/check-in area, staff area, administrative and support spaces,
- A community room, and
- Public toilets

President
Liz Wielinski
Vice President
Scott Vreeland
Commissioners
Brad Bourn
John Erwin
Meg Forney
Steffanie Musich
Jon C. Olson
Anita Tabb
M. Annie Young
Superintendent
Jayne Miller
Secretary to the Board
Jennifer B. Ringold

Accredited CAPRA 2010-2020

The project requires Administrative Site Plan Review with the City of Minneapolis Community Planning and Economic Development (CPED).

The Minneapolis Planning Commission approved six requested variances to the project at their December 7, 2015 meeting. Those variances, most related to the tight site constraints, were outlined in a previous letter to you dated October 15, 2015.

In the meantime, the area of the proposed addition increased from 8,555 square feet to 9,476 square feet to better accommodate MPRB recreation and aquatics programming, staffing, and building usage. Due to this increase, a resubmittal for Administrative Site Plan Review is required. MPRB staff is coordinating with CPED staff regarding the submittal process. No new variances are required for approval, however, following are highlights of the some of the changes to be reviewed.

- Providing 94 parking spaces which is 13 less than the city requirement of 107 due to site size constraints, but 2 more than the 92 parking spaces approved by variance.
- CPED requires a minimum of 12 bicycle parking spaces as a condition of lowering the parking spaces. A total of 27 bicycle parking spaces will be provided.

If you should have any questions regarding the proposed project at Phillips Community Center please don't hesitate to contact me.

Kind regards,

Dana Murdoch, Design Project Manager
Minneapolis Park & Recreation Board
Planning Division, Design & Construction
dmurdoch@minneapolisparks.org
612-230-6446

Attachment: Phillips Community Center Aquatics Facility Schematic Design, dated June 15, 2016

Minneapolis
Park & Recreation Board

Administrative Offices
2117 West River Road
Minneapolis, MN 55411-2227

Operations Center
3800 Bryant Avenue South
Minneapolis, MN 55409-1000

Phone
612-230-6400
Fax
612-230-6500

www.minneapolisparks.org

July 18, 2016

Alondra Cano, Council Member
Minneapolis City Hall, Room 307
350 South 5th Street
Minneapolis, MN 55415

Re: Phillips Community Center Aquatics Facility – Proposed Project

Dear Council Member Cano:

The Minneapolis Park and Recreation Board (MPRB) is proposing a renovation and addition for a new aquatics facility at the Phillips Community Center located at 2323 11th Avenue South. This project is a result of a great deal of community involvement thus far and is financially supported from the State of Minnesota, MPRB, Hennepin County, Minneapolis Public Schools, the 20-year Closing the Gap funding, the immediate neighborhood organizations, and multiple other funders coordinated by Minneapolis Swims. The project budget totals $6,116,000. I'm sharing this information because the project is immediately adjacent to the Ninth Ward.

The existing pool in the Phillips Community Center was closed in 2008. The renovation and addition of the Phillips Community Center Aquatics Facility will result in two pools that can serve a variety of needs, from learn-to-swim programs to aquatics recreation for all ages to competitive swim meets.

Renovated space in the existing Phillips Community Center proposed:

- Renovation of the existing 6-lane pool and natatorium,
- Renovation of the abandoned locker and shower facilities,
- Restoration of the original spectator seating area

The new addition proposes:

- 4-lane teaching pool with ramped entry and infrastructure to support a future spa/hot tub,
- Two locker/changing rooms to serve a variety of needs from general locker rooms to families to swim teams,
- Reception/check-in area, staff area, administrative and support spaces,
- A community room, and
- Public toilets

President
Liz Wielinski

Vice President
Scott Vreeland

Commissioners
Brad Bourn
John Erwin
Meg Forney
Steffanie Musich
Jon C. Olson
Anita Tabb
M. Annie Young

Superintendent
Jayne Miller

Secretary to the Board
Jennifer B. Ringold

Accredited CAPRA 2010-2020

The project requires Administrative Site Plan Review with the City of Minneapolis Community Planning and Economic Development (CPED).

The Minneapolis Planning Commission approved six requested variances to the project at their December 7, 2015 meeting. Those variances, most related to the tight site constraints, were outlined in a previous letter dated October 15, 2015. I will attach a copy for your reference.

In the meantime, the area of the proposed addition increased from 8,555 square feet to 9,476 square feet to better accommodate MPRB recreation and aquatics programming, staffing, and building usage. Due to this increase, a resubmittal for Administrative Site Plan Review is required. MPRB staff is coordinating with CPED staff regarding the submittal process. No new variances are required for approval, however, following are highlights of the some of the changes to be reviewed.

- Providing 94 parking spaces which is 13 less than the city requirement of 107 due to site size constraints, but 2 more than the 92 parking spaces approved by variance.
- CPED requires a minimum of 12 bicycle parking spaces as a condition of lowering the parking spaces. A total of 27 bicycle parking spaces will be provided.

If you should have any questions regarding the proposed project at Phillips Community Center please don't hesitate to contact me.

Kind regards,

Dana Murdoch, Design Project Manager
Minneapolis Park & Recreation Board
Planning Division, Design & Construction
dmurdoch@minneapolisparks.org
612-230-6446

Attachment: Phillips Community Center Aquatics Facility Schematic Design, dated June 15, 2016
Phillips Community Center Aquatics Facility – Proposed Project. Letter dated October 22, 2015

Minneapolis
Park & Recreation Board

Administrative Offices
2117 West River Road
Minneapolis, MN 55411-2227

Operations Center
3800 Bryant Avenue South
Minneapolis, MN 55409-1000

Phone
612-230-6400
Fax
612-230-6500

www.minneapolisparks.org

July 18, 2015

Ventura Village Neighborhood Organization
P.O. Box 580757
Minneapolis, MN 55458

Re: Phillips Community Center Aquatics Facility – Proposed Project

Ventura Village Neighborhood Organization:

The Minneapolis Park and Recreation Board (MPRB) is proposing a renovation and addition for a new aquatics facility at the Phillips Community Center located at 2323 11th Avenue South. This project is a result of a great deal of community involvement thus far and is financially supported from the State of Minnesota, MPRB, Hennepin County, Minneapolis Public Schools, the 20-year Closing the Gap funding, the immediate neighborhood organizations, and multiple other funders coordinated by Minneapolis Swims. The project budget totals $6,116,000.

The existing pool in the Phillips Community Center was closed in 2008. The renovation and addition of the Phillips Community Center Aquatics Facility will result in two pools that can serve a variety of needs, from learn-to-swim programs to aquatics recreation for all ages to competitive swim meets.

Renovated space in the existing Phillips Community Center proposed:

- Renovation of the existing 6-lane pool and natatorium,
- Renovation of the abandoned locker and shower facilities,
- Restoration of the original spectator seating area

The new addition proposes:

- 4-lane teaching pool with ramped entry and infrastructure to support a future spa/hot tub,
- Two locker/changing rooms to serve a variety of needs from general locker rooms to families to swim teams,
- Reception/check-in area, staff area, administrative and support spaces,
- A community room, and
- Public toilets

President
Liz Wielinski
Vice President
Scott Vreeland
Commissioners
Brad Bourn
John Erwin
Meg Forney
Steffanie Musich
Jon C. Olson
Anita Tabb
M. Annie Young
Superintendent
Jayne Miller
Secretary to the Board
Jennifer B. Ringold

Accredited CAPRA 2010-2020

The project requires Administrative Site Plan Review with the City of Minneapolis Community Planning and Economic Development (CPED).

The Minneapolis Planning Commission approved six requested variances to the project at their December 7, 2015 meeting. Those variances, most related to the tight site constraints, were outlined in a previous letter to you dated October 15, 2015.

In the meantime, the area of the proposed addition increased from 8,555 square feet to 9,476 square feet to better accommodate MPRB recreation and aquatics programming, staffing, and building usage. Due to this increase, a resubmittal for Administrative Site Plan Review is required. MPRB staff is coordinating with CPED staff regarding the submittal process. No new variances are required for approval, however, following are highlights of the some of the changes to be reviewed.

- Providing 94 parking spaces which is 13 less than the city requirement of 107 due to site size constraints, but 2 more than the 92 parking spaces approved by variance.
- CPED requires a minimum of 12 bicycle parking spaces as a condition of lowering the parking spaces. A total of 27 bicycle parking spaces will be provided.

If you should have any questions regarding the proposed project at Phillips Community Center please don't hesitate to contact me.

Kind regards,

Dana Murdoch, Design Project Manager
Minneapolis Park & Recreation Board
Planning Division, Design & Construction
dmurdoch@minneapolisparks.org
612-230-6446

Attachment: Phillips Community Center Aquatics Facility Schematic Design, dated June 15, 2016

Minneapolis
Park & Recreation Board

Administrative Offices
2117 West River Road
Minneapolis, MN 55411-2227

Operations Center
3800 Bryant Avenue South
Minneapolis, MN 55409-1000

Phone
612-230-6400
Fax
612-230-6500

www.minneapolisparks.org

July 18, 2016

Midtown Phillips Neighborhood Organization
2828 10th Avenue South, Office 1205F
Minneapolis, MN 55407

Re: Phillips Community Center Aquatics Facility – Proposed Project

Midtown Phillips Neighborhood Organization:

The Minneapolis Park and Recreation Board (MPRB) is proposing a renovation and addition for a new aquatics facility at the Phillips Community Center located at 2323 11th Avenue South. This project is a result of a great deal of community involvement thus far and is financially supported from the State of Minnesota, MPRB, Hennepin County, Minneapolis Public Schools, the 20-year Closing the Gap funding, the immediate neighborhood organizations, and multiple other funders coordinated by Minneapolis Swims. The project budget totals $6,116,000.

The existing pool in the Phillips Community Center was closed in 2008. The renovation and addition of the Phillips Community Center Aquatics Facility will result in two pools that can serve a variety of needs, from learn-to-swim programs to aquatics recreation for all ages to competitive swim meets.

Renovated space in the existing Phillips Community Center proposed:

- Renovation of the existing 6-lane pool and natatorium,
- Renovation of the abandoned locker and shower facilities,
- Restoration of the original spectator seating area

The new addition proposes:

- 4-lane teaching pool with ramped entry and infrastructure to support a future spa/hot tub,
- Two locker/changing rooms to serve a variety of needs from general locker rooms to families to swim teams,
- Reception/check-in area, staff area, administrative and support spaces,
- A community room, and
- Public toilets

President
Liz Wielinski
Vice President
Scott Vreeland
Commissioners
Brad Bourn
John Erwin
Meg Forney
Steffanie Musich
Jon C. Olson
Anita Tabb
M. Annie Young
Superintendent
Jayne Miller
Secretary to the Board
Jennifer B. Ringold

Accredited CAPRA 2010-2020

The project requires Administrative Site Plan Review with the City of Minneapolis Community Planning and Economic Development (CPED).

The Minneapolis Planning Commission approved six requested variances to the project at their December 7, 2015 meeting. Those variances, most related to the tight site constraints, were outlined in a previous letter to you dated October 15, 2015.

In the meantime, the area of the proposed addition increased from 8,555 square feet to 9,476 square feet to better accommodate MPRB recreation and aquatics programming, staffing, and building usage. Due to this increase, a resubmittal for Administrative Site Plan Review is required. MPRB staff is coordinating with CPED staff regarding the submittal process. No new variances are required for approval, however, following are highlights of the some of the changes to be reviewed.

- Providing 94 parking spaces which is 13 less than the city requirement of 107 due to site size constraints, but 2 more than the 92 parking spaces approved by variance.
- CPED requires a minimum of 12 bicycle parking spaces as a condition of lowering the parking spaces. A total of 27 bicycle parking spaces will be provided.

If you should have any questions regarding the proposed project at Phillips Community Center please don't hesitate to contact me.

Kind regards,

Dana Murdoch, Design Project Manager
Minneapolis Park & Recreation Board
Planning Division, Design & Construction
dmurdoch@minneapolisparks.org
612-230-6446

Attachment: Phillips Community Center Aquatics Facility Schematic Design, dated June 15, 2016