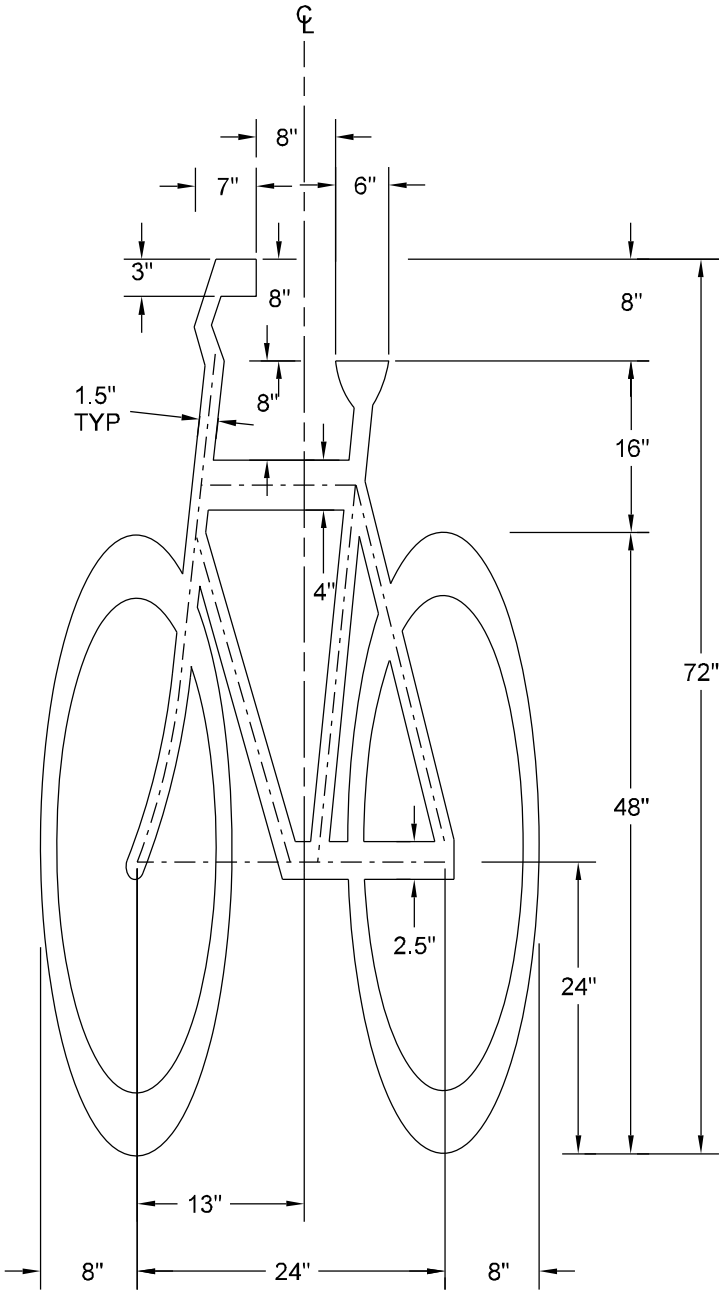

NO SCALE

MINNEAPOLIS DEPARTMENT OF PUBLIC WORKS		SYMBOLS - PAVEMENT MARKINGS BIKE	STANDARD PLATE NO. TRAF-7652-R2
DRAWN: CLK	DATE: 1/27/16		
APPROVED: DRP	DATE: 1/27/16		