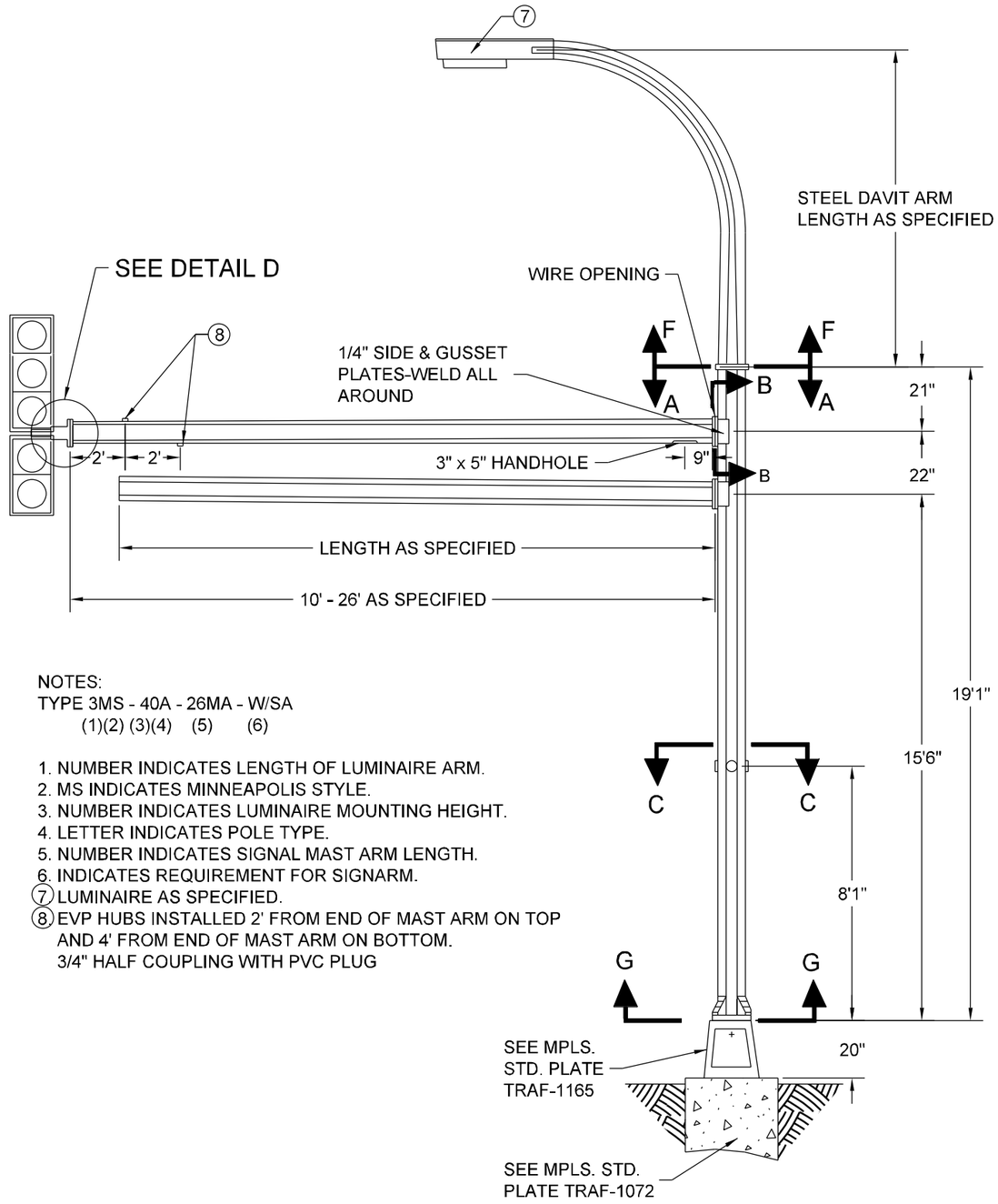

NOTES:
TYPE 3MS - 40A - 26MA - W/SA
(1)(2) (3)(4) (5) (6)

1. NUMBER INDICATES LENGTH OF LUMINAIRE ARM.
2. MS INDICATES MINNEAPOLIS STYLE.
3. NUMBER INDICATES LUMINAIRE MOUNTING HEIGHT.
4. LETTER INDICATES POLE TYPE.
5. NUMBER INDICATES SIGNAL MAST ARM LENGTH.
6. INDICATES REQUIREMENT FOR SIGNARM.
7. LUMINAIRE AS SPECIFIED.
8. EVP HUBS INSTALLED 2' FROM END OF MAST ARM ON TOP AND 4' FROM END OF MAST ARM ON BOTTOM. 3/4" HALF COUPLING WITH PVC PLUG

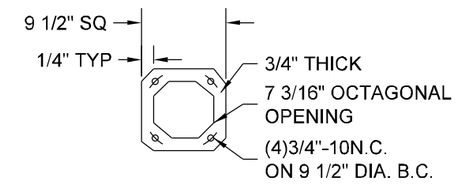

VIEW A-A

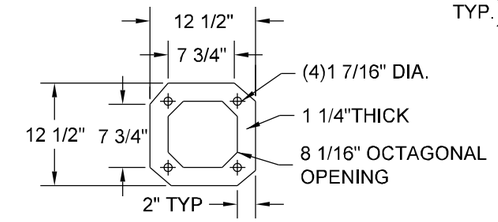

VIEW B-B
(MAST ARM & SIGN ARM)

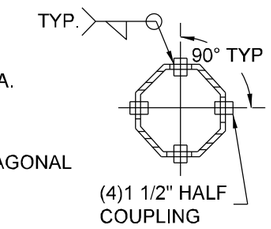

SECTION C-C

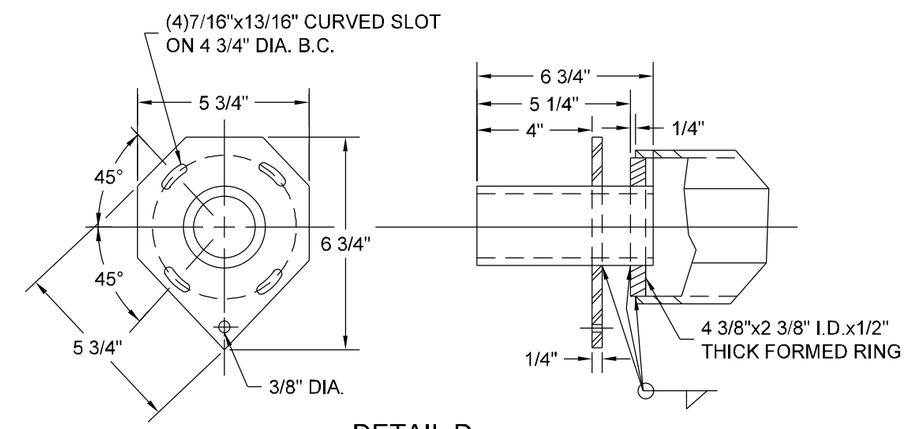

DETAIL D

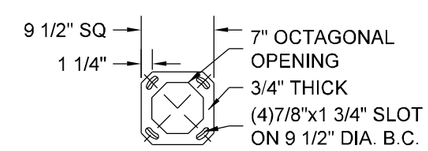

VIEW F-F

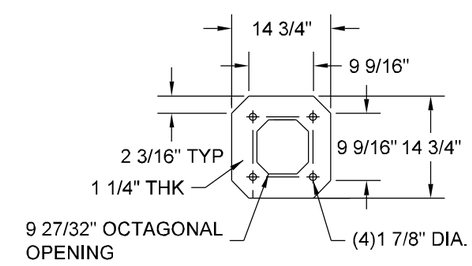

VIEW G-G

NO SCALE

Minneapolis Public Works	DRW: CLK	DATE: 3/18/16	POLE - SIGNAL MASTARM 10'-26' TYPE "A" REFERENCE PLATES: TRAF-1072, TRAF1165	STANDARD PLATE NO. TRAF-1224-R2
	APP: DRP	DATE: 3/18/16		