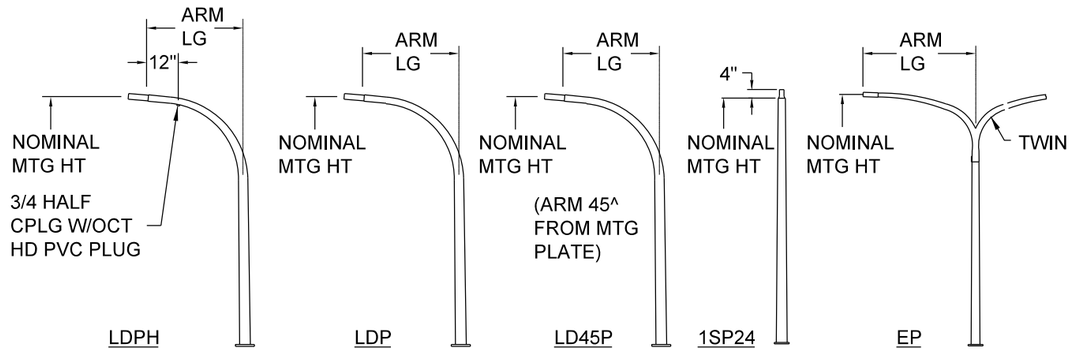

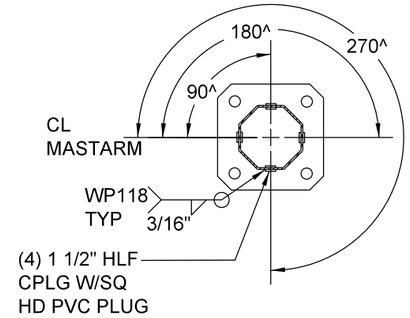

SECTION A-A

POST SIGNAL HUB LOCATION

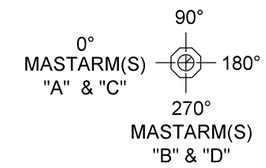

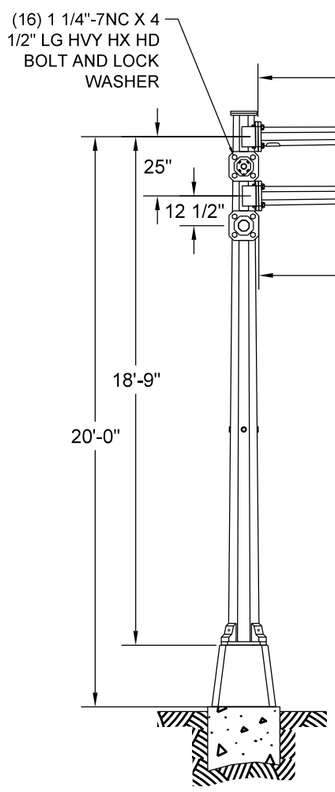

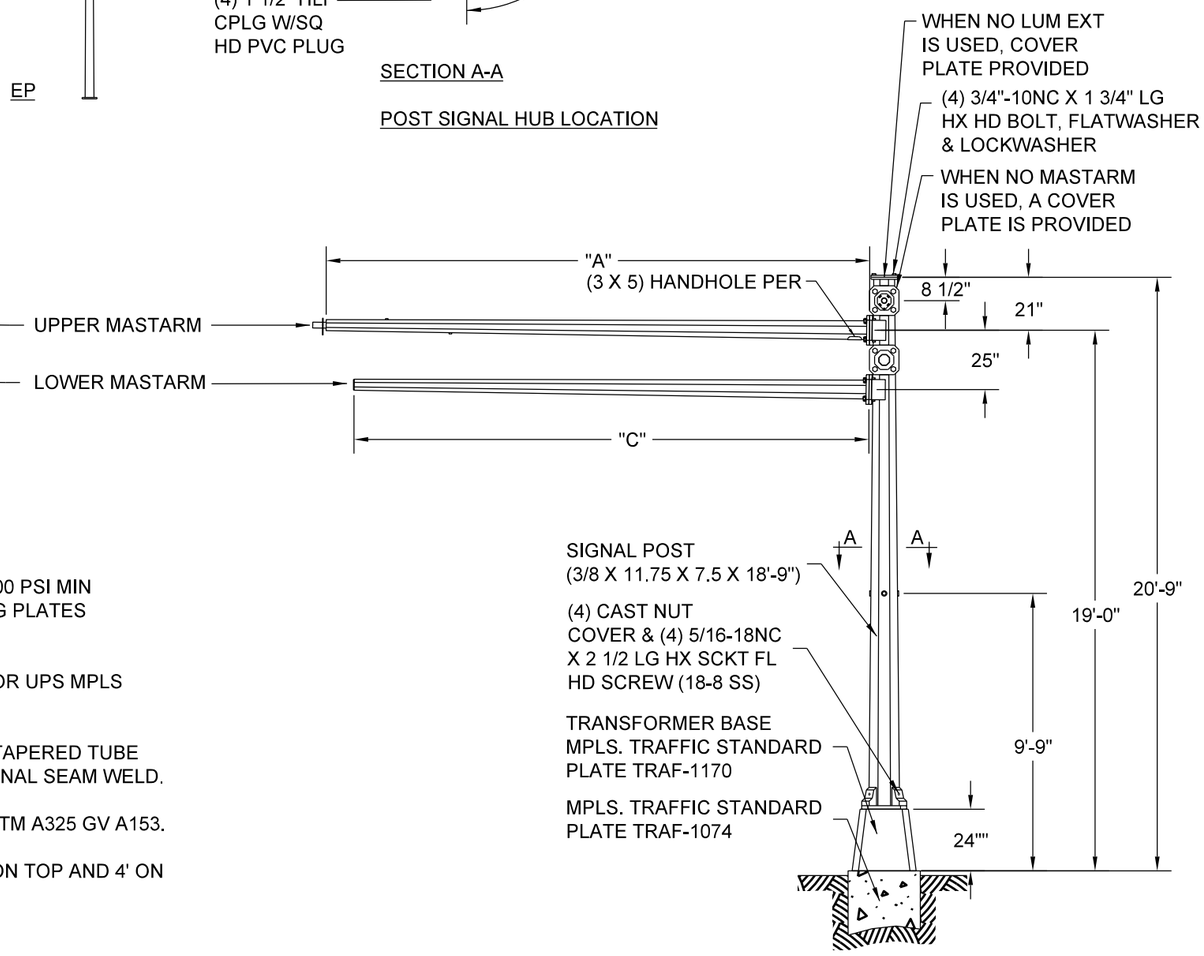

NOTE:

1. MATERIAL - HIGH STRENGTH LOW ALLOY STEEL 50,000 PSI MIN YIELD PER ASTM A572 OR A1011. BASE AND MOUNTING PLATES PER ASTM A36.
2. FINISH - PRIME EXTERIOR AND FINISH PAINT EXTERIOR UPS MPLS BROWN.
3. POST AND SIGNAL MASTARM(S) TO BE OCTAGONAL TAPERED TUBE FABRICATED WITH ONE SUBMERGED ARC LONGITUDINAL SEAM WELD.
4. HEX HEAD BOLTS AND NUTS (UNLESS SPECIFIED) ASTM A325 GV A153.
5. EVP HUBS (3/4" FEMALE THREADED) PROVIDE AT 2' ON TOP AND 4' ON BOTTOM FROM END OF UPPER MASTARM

QTY	POLE NO	MASTARM				LUMINAIRE EXTENSION			LOCATION
		"A"	"B"	"C"	"D"	MTG HT	ARM LG	TYPE	
-	-	-	-	-	-	-	-	-	-

NO SCALE

Minneapolis Public Works

DRW: CLK	DATE: 4/14/15	POLE - SIGNAL MASTARM TWIN TYPE "B" REFERENCE PLATE: TRAF-1074, TRAF-1170	STANDARD PLATE NO. TRAF-1238-R1
APP: DRP	DATE: 4/14/15		

SHEET 1 OF 2