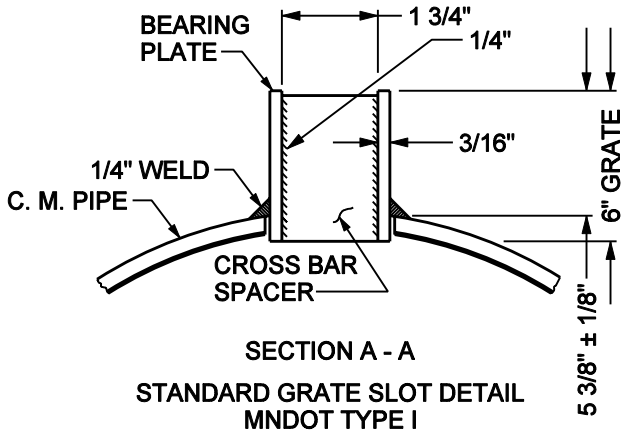

SECTION A - A

STANDARD GRATE SLOT DETAIL
MNDOT TYPE I

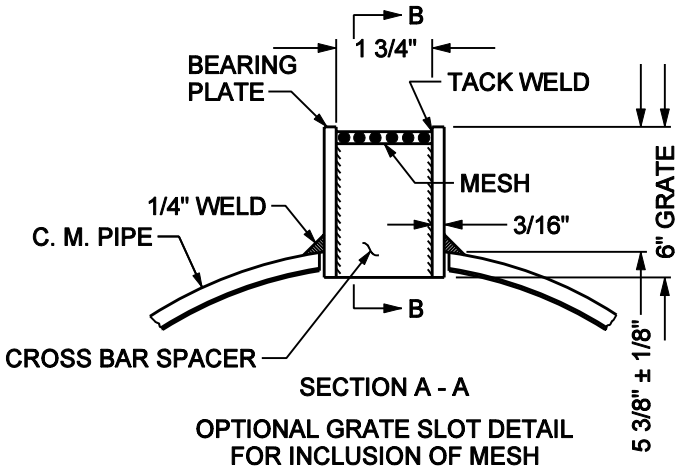

SECTION A - A

OPTIONAL GRATE SLOT DETAIL
FOR INCLUSION OF MESH
MNDOT TYPE II

1/2" No. 13 STANDARD GALVANIZED
EXPANDED METAL MESH, TACK WELD
TO THE GRATE EVERY 6" @ CROSS BAR SPACERS

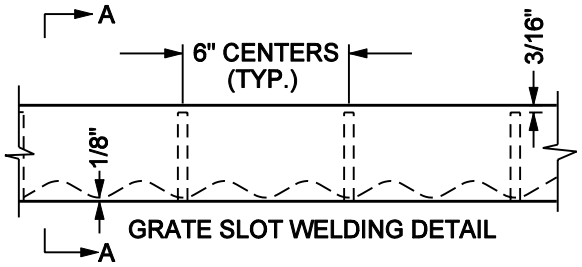

GRATE SLOT WELDING DETAIL

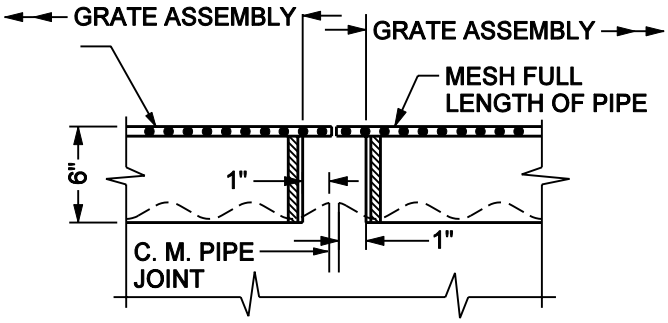

OPTIONAL GRATE SLOT WELDING DETAIL
SECTION B - B

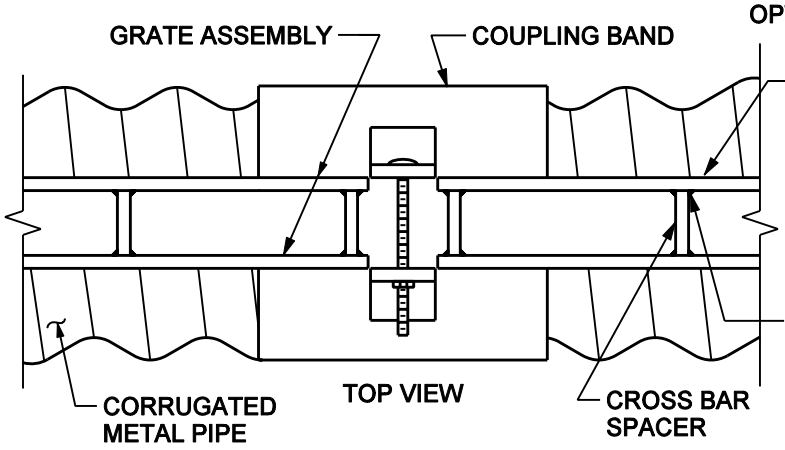

TOP VIEW

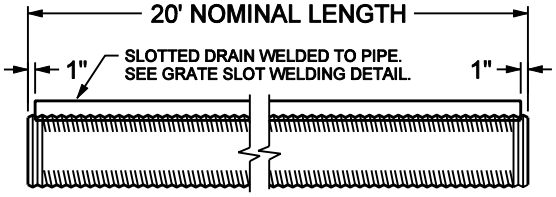

GRATE SLOT DRAIN

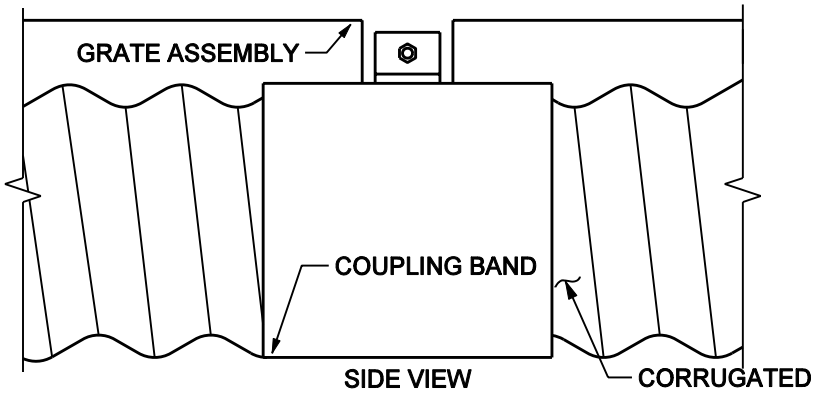

SIDE VIEW
TYPICAL COUPLING BAND

NOTES:
INSTALLATION OF THE SLOTTED DRAIN UNDER THE TRAVELED WAY IS NOT ALLOWED.
DEPTH OF GRATES SHALL BE 6".
GRATE ASSEMBLIES TO CONFORM TO MNDOT SPEC. 3306 AND SHALL BE GALVANIZED AFTER FABRICATION AS PER MNDOT SPEC. 3394.
SLOTTED DRAINS SHALL BE FURNISHED IN 20' LENGTHS WHENEVER PRACTICAL TO MINIMIZE THE NUMBER OF JOINTS REQUIRED.
PIPE THICKNESS SHALL BE 14 GAGE (0.79") OR GREATER.
ALL WELDED LOCATIONS SHALL BE PAINTED WITH HIGH ZINC DUST CONTENT PAINT TO MNDOT SPEC. 3518 OR 3520 AFTER ATTACHING TO PIPE.
MINNEAPOLIS CITY ENGINEER APPROVAL REQUIRED.
USE MAY BE RESTRICTED.

MNDOT SPEC. REF. 1703, 2503
MNDOT 3137B, 3138B
NOT TO SCALE

MINNEAPOLIS DEPARTMENT OF PUBLIC WORKS		SLOTTED DRAIN FOR 12" THROUGH 30" DIAMETER CM PIPE	STANDARD PLATE NO. SEWR-4016
DRAWN: DCD	DATE: 3/03		
APPROVED: HRS	DATE: 12/06		