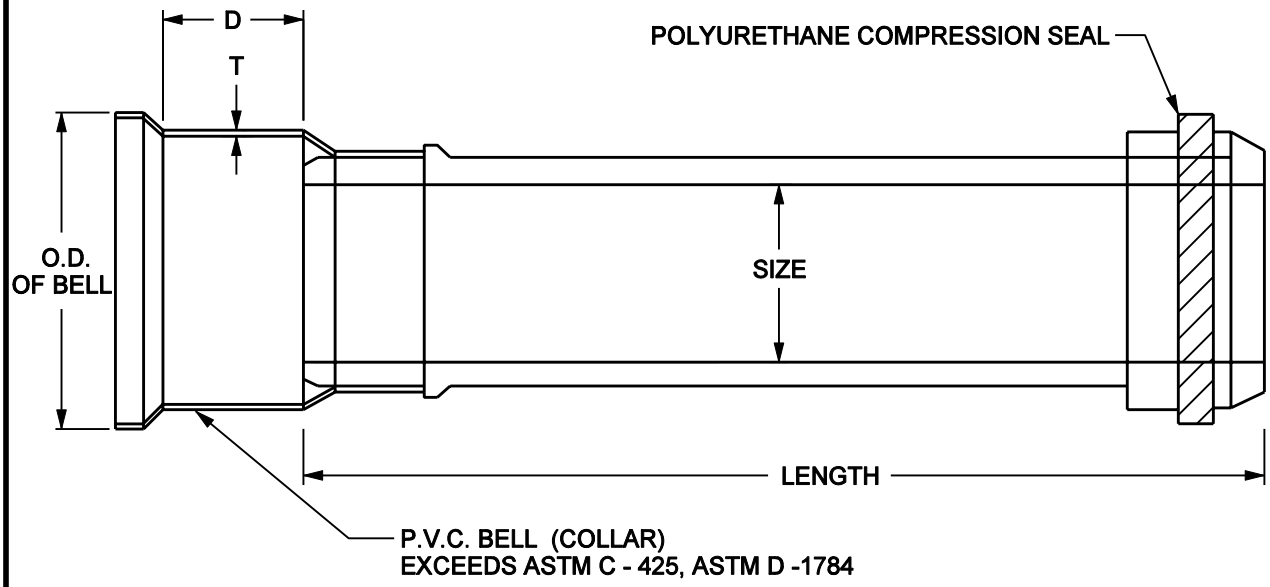

EXCEEDS PERFORMANCE REQUIREMENTS OF :
ASTM C - 700 AND ASTM C - 425
AASHTO M 65

INSTALLATION METHODS TO MEET OR
EXCEED ASTM C - 12

COLLAR DIMENSIONS					
SIZE (INCHES)	LENGTH (FEET)	WEIGHT (LB / FT)	O.D. BELL (INCHES)	D (INCHES)	T (INCHES)
4	1 - 4 1/2	8.84	5.96	2.0	0.130
6	1 - 4 1/2	17.44	8.30	2.0	0.150
8	1 - 5 1/2	27.09	10.82	2.5	0.180
10	1 - 6	40.45	12.95	2.5	0.210
12	1 - 6	53.25	15.38	2.5	0.240
15	2 - 7 1/2	88.39			
18	2 - 8	129.94			
21	2 - 10	179.95			
24	2 - 10	228.11			
27	3 - 10	261.88			
30	3 - 10	293.75			
36	3 - 10	462.00			
42	3 - 10	650.00			
48	3 - 10	786.00			

REFERENCE PLATE ONLY

MINNEAPOLIS CUSTOM
MNDOT SPEC. REF. 3251
NOT TO SCALE

MINNEAPOLIS
DEPARTMENT OF PUBLIC WORKS

DRAWN: DCD	DATE: 7/07
APPROVED: HRS	DATE: 7/07

NO-BELL VITRIFIED CLAY PIPE

STANDARD PLATE NO. SEWR-5016