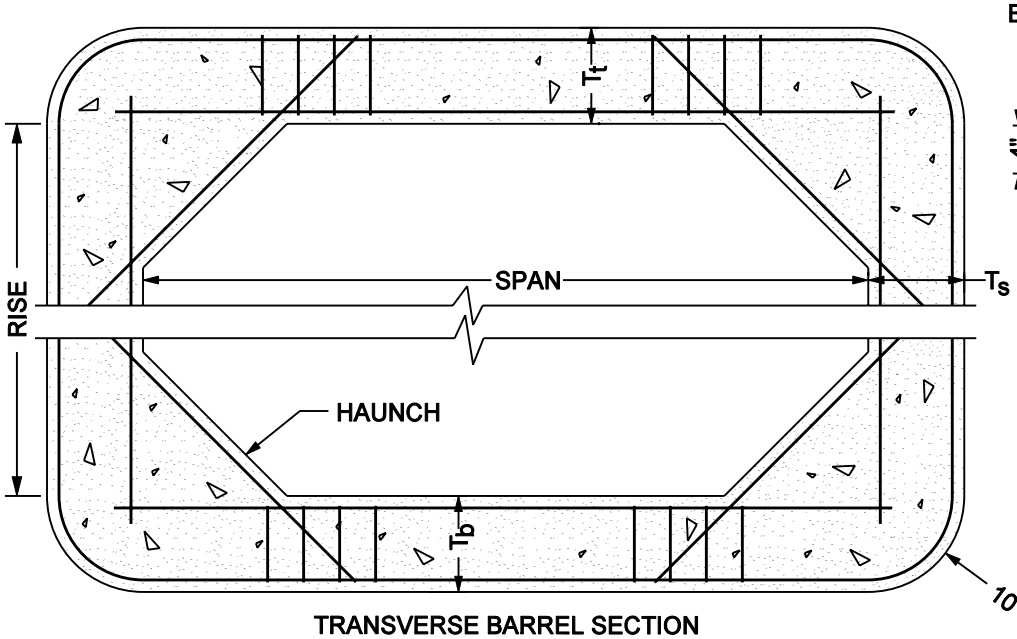

TRANSVERSE BARREL SECTION

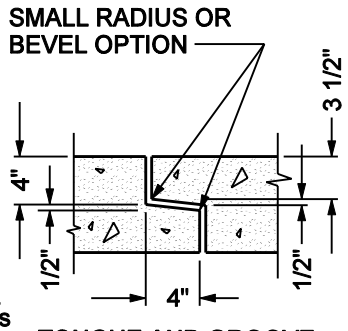

TONGUE AND GROOVE JOINT DETAIL

SINGLE LINE STEEL WIRE FABRIC HAVING AN AREA OF NOT LESS THAN 0.12 SQ. IN. PER FOOT OF HEIGHT

REINFORCEMENT STEEL TO CONFORM TO MNDOT 3238 SPECIFICATIONS
STANDARD LAYING LENGTH = 6.0'

STANDARD MNDOT PRECAST CONCRETE BOX CULVERTS

SPAN x RISE (FEET)	CLASS	f ' c (PSI)	FILL HEIGHT RANGE (FEET)	Tt (IN)	Tb (IN)	Ts (IN)	WEIGHT (LBS./FT.)
6 x 4	1	5000	< 2	8	8	8	2480
6 x 4	2	5000	2 - 15	8	8	8	2480
6 x 4	3	5500	15 - 25	8	8	8	2480
6 x 5	1	5000	< 2	8	8	8	2680
6 x 5	2	5000	2 - 15	8	8	8	2680
6 x 5	3	5500	15 - 25	8	8	8	2680
6 x 6	1	5000	< 2	8	8	8	2880
6 x 6	2	5000	2 - 15	8	8	8	2880
6 x 6	3	5500	15 - 25	8	8	8	2880
8 x 4	1	5000	< 2	9	10	8	3230
8 x 4	2	5000	2 - 10	9	10	8	3230
8 x 4	3	5000	10 - 20	9	10	8	3230
8 x 4	4	5500	20 - 25	9	10	8	3230
8 x 5	1	5000	< 2	9	10	8	3430
8 x 5	2	5000	2 - 10	9	10	8	3430

MNDOT SPEC. REF. 3238; 1 OF 5; NOT TO SCALE

MINNEAPOLIS
DEPARTMENT OF PUBLIC WORKS

DRAWN: DCD	DATE: 3/03
APPROVED: HRS	DATE: 12/06

PRECAST CONCRETE BOX CULVERTS

STANDARD PLATE NO. SEWR-4008