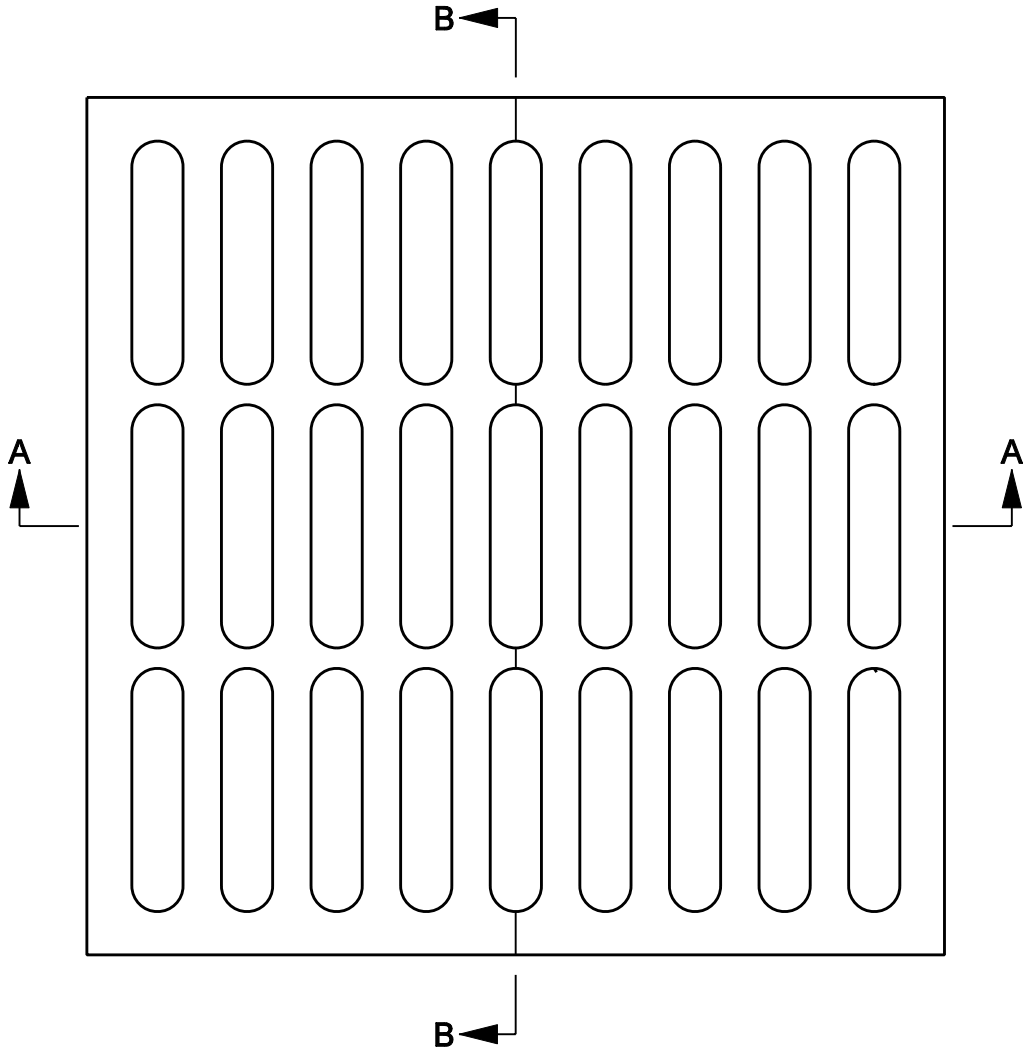


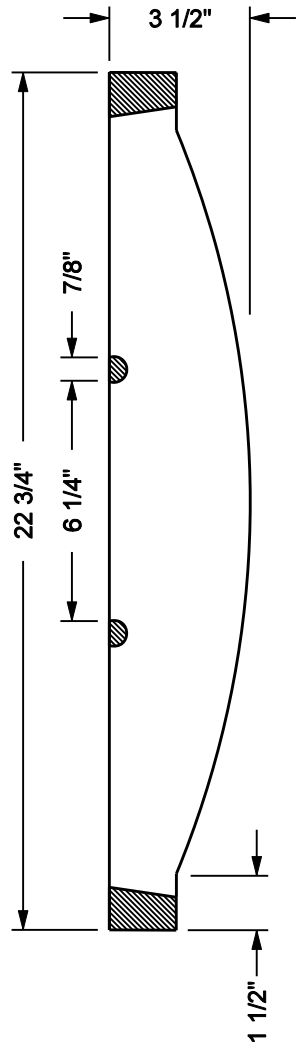


SECTION B-B

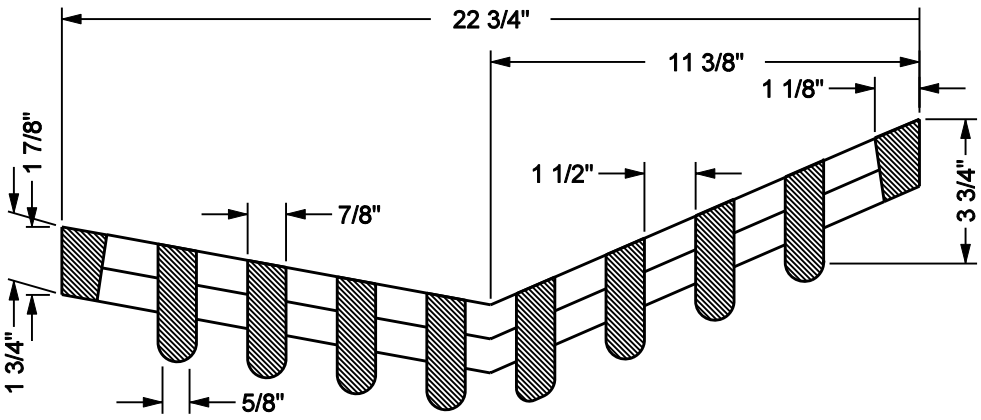


SECTION A-A

## USE RESTRICTED, CITY ENGINEER APPROVAL REQUIRED

MODIFY LOCATION OF CATCH BASIN TO A CURB FLOW MINNEAPOLIS STANDARD CATCH BASIN

## REFERENCE PLATE ONLY

MINNEAPOLIS CUSTOM
MNDOT SPEC. REF. 2506
MODIFIED MNDOT 4151B
NOT TO SCALE

NOTES:
MATERIAL: CAST GRAY IRON ASTM A-48

| | | | |
|---|---|---|---|
| **MINNEAPOLIS** DEPARTMENT OF PUBLIC WORKS | | ALLEY APRON CATCH BASIN GRATE | STANDARD PLATE NO. SEWR-5014 |
| DRAWN: ZTT | DATE: 4/03 | | |
| APPROVED: HRS | DATE: 1/07 | | |