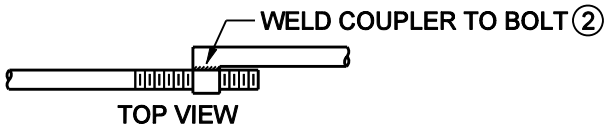


TOP VIEW

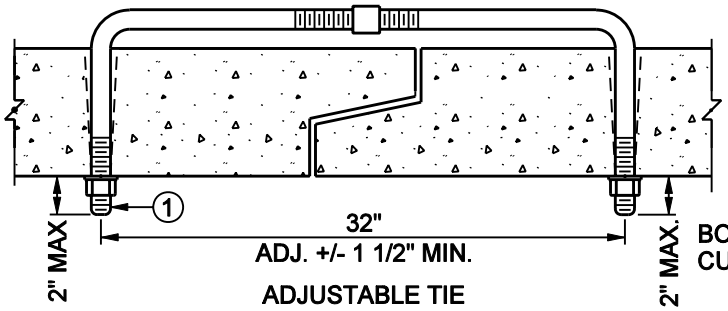


ADJUSTABLE TIE

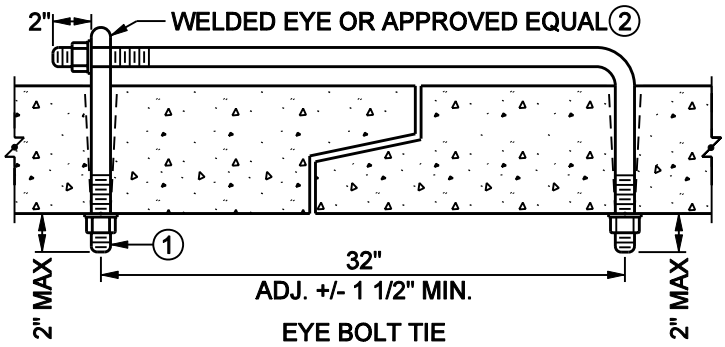


EYE BOLT TIE

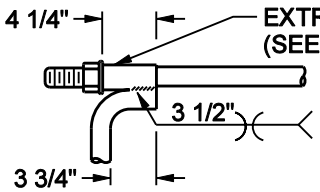


DETAIL A

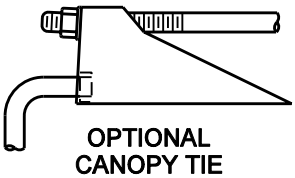

OPTIONAL
CANOPY TIE

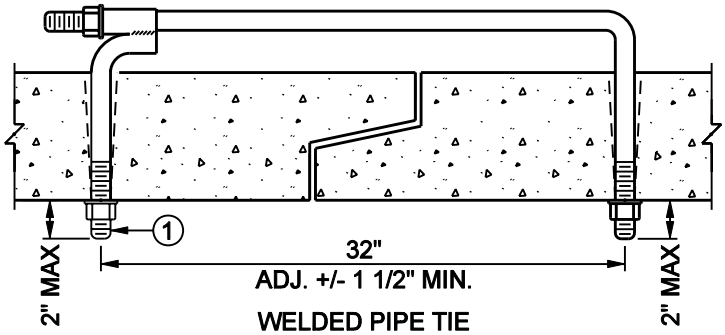


WELDED PIPE TIE

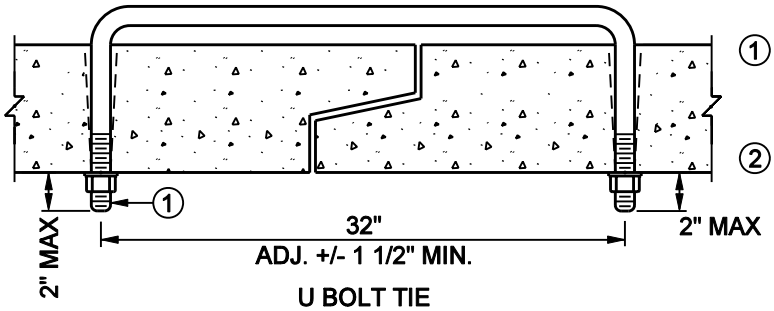


U BOLT TIE

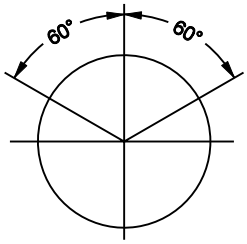


ROUND PIPE

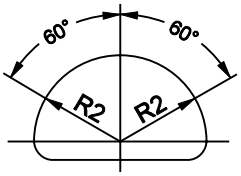


PIPE-ARCH

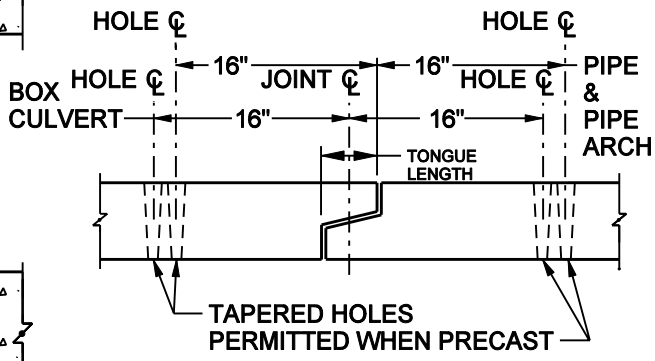


HOLES SHALL BE CAST OR DRILLED 16" FROM CENTERLINE OF JOINTS FOR BOX CULVERTS, AS SHOWN ABOVE, UNLESS FORMS ARE SETUP FOR 16" SPACING FROM OUTSIDE OF JOINT.

PLACEMENT OF HOLES

| PIPE SIZE (INCHES) | ROD DIA. |
|---|---|
| 12-27 | 5/8" |
| 30-66 | 3/4" |
| 72-108 | 1" |

| ROD DIA. | EXTRA STRONG PIPE INSIDE DIA. |
|---|---|
| 5/8" | 3/4" |
| 3/4" | 1" |
| 1" | 1 1/4" |

PIPE SIZE LISTED IS INSIDE DIA. OF ROUND PIPE OR EQUIVALENT DIA. OF PIPE ARCH.

NOTES

FOR CONC. CULVERTS, PIPE TIES SHALL BE REQUIRED FOR ALL JOINTS UNLESS OTHERWISE SPECIFIED IN THE PLANS OR IN THE SPECIAL PROVISIONS.

FOR CONCRETE SEWERS, TIE THE THREE END SECTIONS (INCLUDING APRON) OF A FREE END (NO MANHOLE).

NUTS AND WASHERS ARE NOT REQUIRED ON INSIDE OF PIPES 27" OR LESS IN DIAMETER.

ON BELL PIPE LARGER THAN 24", TIES MAY BE INSERTED FROM THE INSIDE.

TIE RODS SHALL BE GALVANIZED AS PER SPEC. 3392 AFTER FABRICATION.

STEEL SHALL CONFORM TO SPEC. 3306 OR EQUAL. TIES TO BE USED ONLY TO HOLD PIPE SECTIONS TOGETHER, NOT FOR PULLING SECTIONS TIGHT.

① TIE ROD THREADS SHALL PROJECT OUTSIDE OF PIPE ON CATTLE PASSES OR PIPE WHERE CHILDREN OR OTHERS MIGHT ENTER THE PIPE.

② CONNECTION SHALL BE PLACED AT DOWN-STREAM END WHEN CONNECTION IS PLACED INSIDE OF STRUCTURE.

MNDOT SPEC. REF. 2501, 2503
MNDOT 3145E
NOT TO SCALE

**MINNEAPOLIS**
**DEPARTMENT OF PUBLIC WORKS**

| | |
|---|---|
| DRAWN: ZTT | DATE: 1/03 |
| APPROVED: HRS | DATE: 12/06 |

CONCRETE PIPE TIES

STANDARD PLATE NO. SEWR-3004