NICOLLET–CENTRAL MODERN STREETCAR

ENVIRONMENTAL ASSESSMENT
CONCEPT DESIGN SET
NOVEMBER 2014

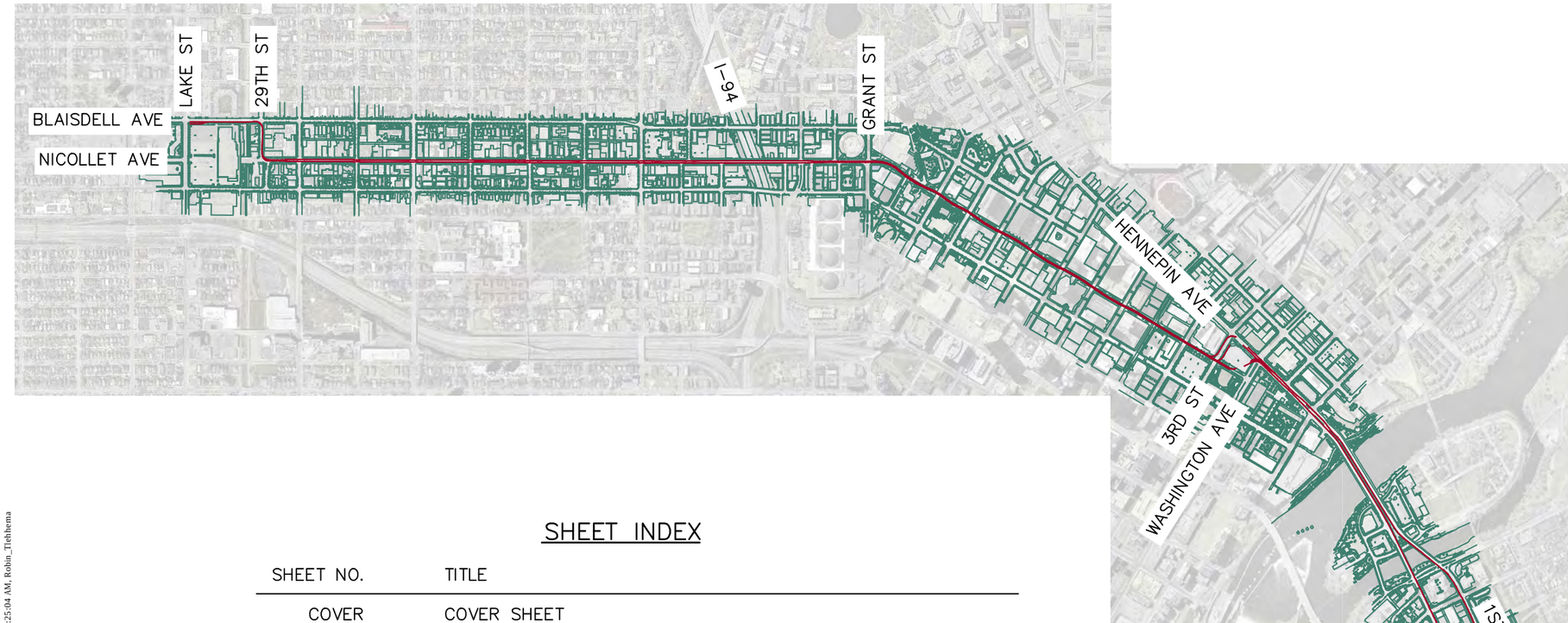

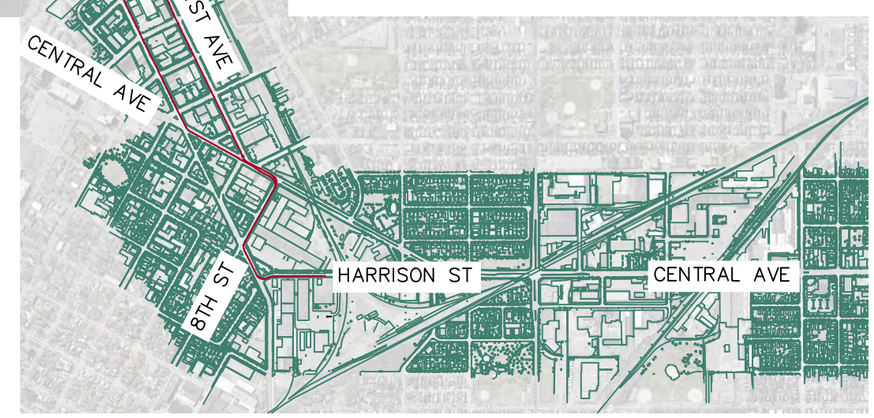

SHEET INDEX

SHEET NO.	TITLE
COVER	COVER SHEET
1 THRU 6	MAINLINE PLANS AND TYPICAL SECTIONS ALONG NICOLLET
7 THRU 9	MAINLINE PLANS AND TYPICAL SECTIONS ALONG NICOLLET MALL
10 THRU 13	MAINLINE PLANS AND TYPICAL SECTIONS ALONG HENNEPIN
14	MAINLINE PLANS AND TYPICAL SECTIONS ALONG CENTRAL/8TH
15	MAINTENANCE FACILITY LOCATION PLAN ALONG HARRISON
16	TYPICAL CURBSIDE STREETCAR STOP LAYOUT
17	TYPICAL MEDIAN STREETCAR STOP LAYOUT

O:\25698074 Nicollet Central Streetcar\5000 Technical\CADD\dwg\NCS Concept Design (Review Set).dwg, 11/24/2014 11:25:04 AM, Robin_Tiehhema

URS

Minneapolis City of Lakes

NICOLLET-CENTRAL MODERN STREETCAR
ENVIRONMENTAL ASSESSMENT
CONCEPT DESIGN SET

1500' 750' 0 1500'
SCALE: 1" = 1500'

Scale: 1"=1500'
Date: NOVEMBER 2014
Sheet No.: COVER

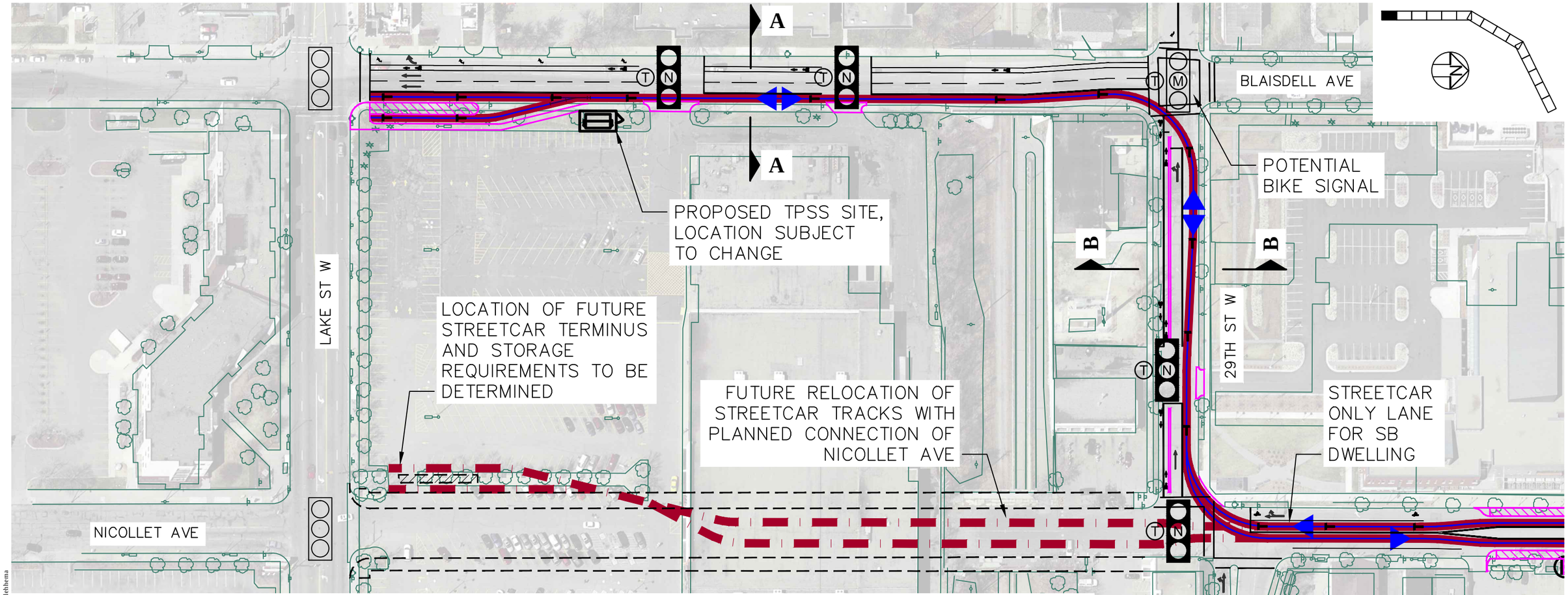

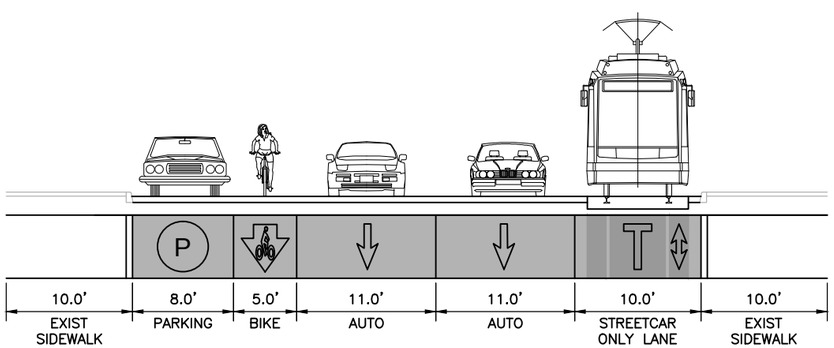

SECTION A-A

BLAISDELL AVENUE (LAKE ST TO 29TH ST)

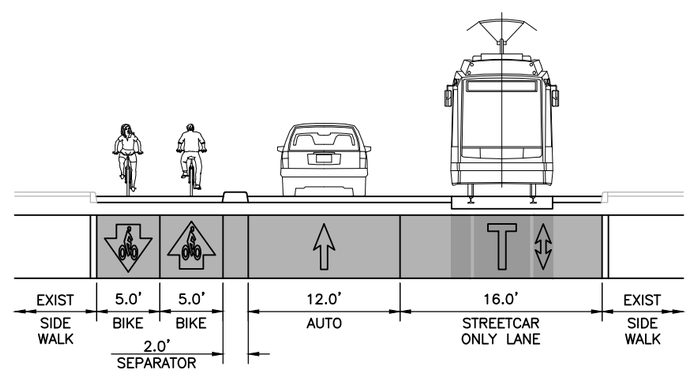

SECTION B-B

29TH STREET (BLAISDELL AVE TO NICOLLET AVE)

URS

Minneapolis City of Lakes

NICOLLET-CENTRAL MODERN STREETCAR ENVIRONMENTAL ASSESSMENT
(LAKE STREET TO CENTRAL AVENUE MOS)
NICOLLET AVENUE

LEGEND:

- TRACK ALIGNMENT
- PROPOSED CURB WORK
- DIRECTION OF TRAVEL
- EXISTING TRAFFIC SIGNAL (NO IMPROVEMENTS)
- MODIFY EXISTING TRAFFIC SIGNAL
- PROPOSED TRAFFIC SIGNAL
- TRANSIT ONLY TRAFFIC SIGNAL PHASE
- EXISTING BUS STOP
- PROPOSED STREETCAR STOP

100' 50' 0 100'
SCALE: 1" = 100'

Scale: 1"=100'
Date: NOVEMBER 2014
Sheet No.: 01

O:\25698074 Nicollet Central Streetcar\5000 Technical\CADD\dwg\NCS Concept Design (Review Set).dwg, 11/24/2014 11:25:19 AM, Robin_Tiehhema

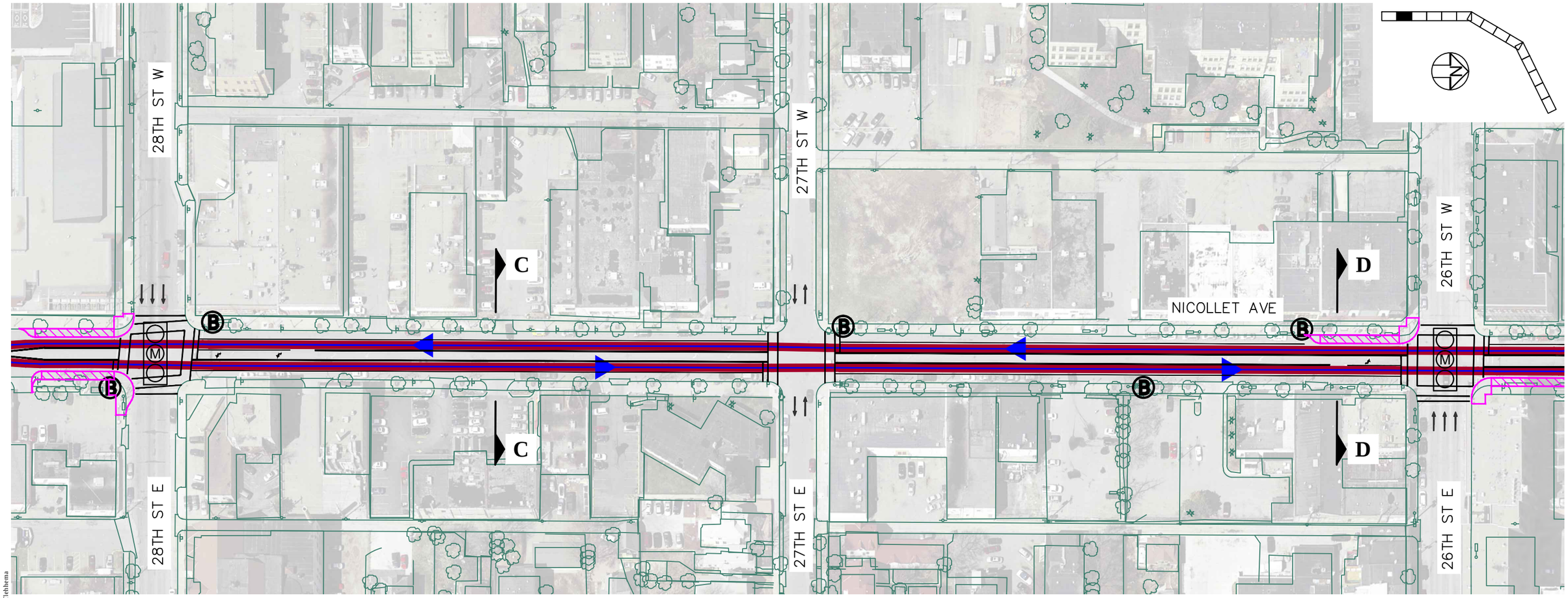

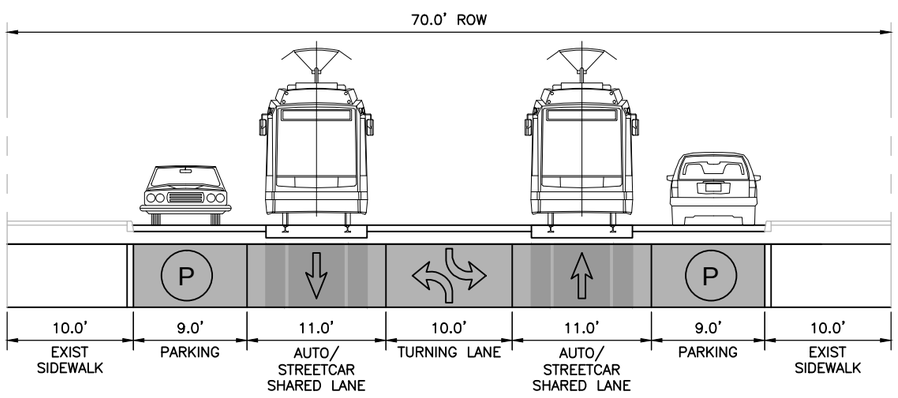

SECTION C-C (AT MID-BLOCK)

NICOLLET AVENUE (29TH ST TO 15TH ST)

NOTE:
EXISTING CURB–TO–CURB WIDTH TO BE MAINTAINED

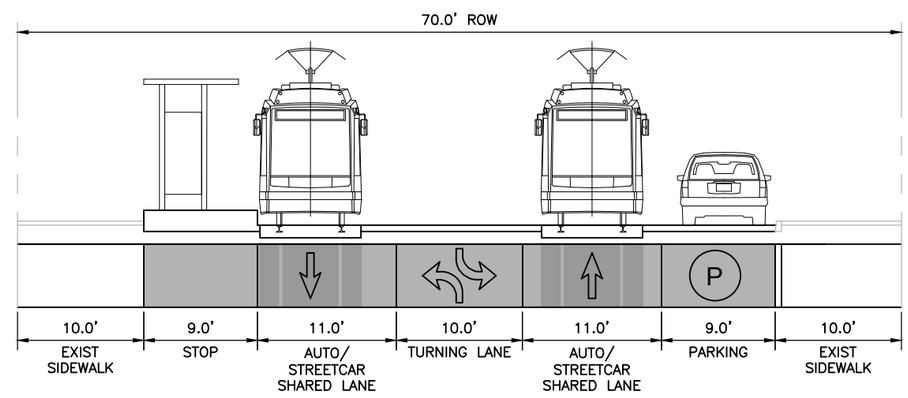

SECTION D-D (AT STOP)

NICOLLET AVENUE (29TH ST TO 15TH ST)

URS

Minneapolis
City of Lakes

NICOLLET-CENTRAL MODERN STREETCAR
ENVIRONMENTAL ASSESSMENT
(LAKE STREET TO CENTRAL AVENUE MOS)
NICOLLET AVENUE

LEGEND:

- TRACK ALIGNMENT
- PROPOSED CURB WORK
- DIRECTION OF TRAVEL
- EXISTING TRAFFIC SIGNAL (NO IMPROVEMENTS)
- MODIFY EXISTING TRAFFIC SIGNAL
- PROPOSED TRAFFIC SIGNAL
- TRANSIT ONLY TRAFFIC SIGNAL PHASE
- EXISTING BUS STOP
- PROPOSED STREETCAR STOP

100' 50' 0 100'
SCALE: 1" = 100'

Scale: 1"=100'
Date: NOVEMBER 2014
Sheet No.: 02

O:\25698074 Nicollet Central Streetcar\5000 Technical\CADD\dwg\NCS Concept Design (Review Set).dwg, 11/24/2014 11:25:52 AM, Robin_Tiehhema

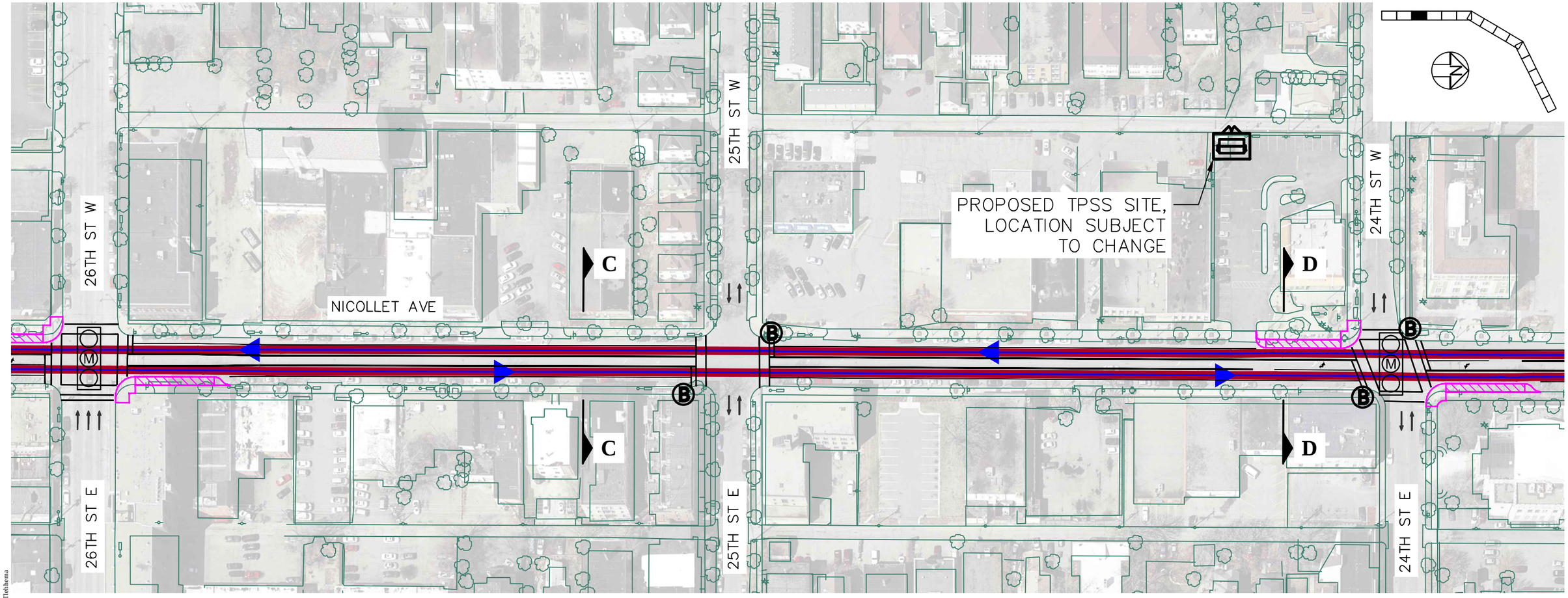

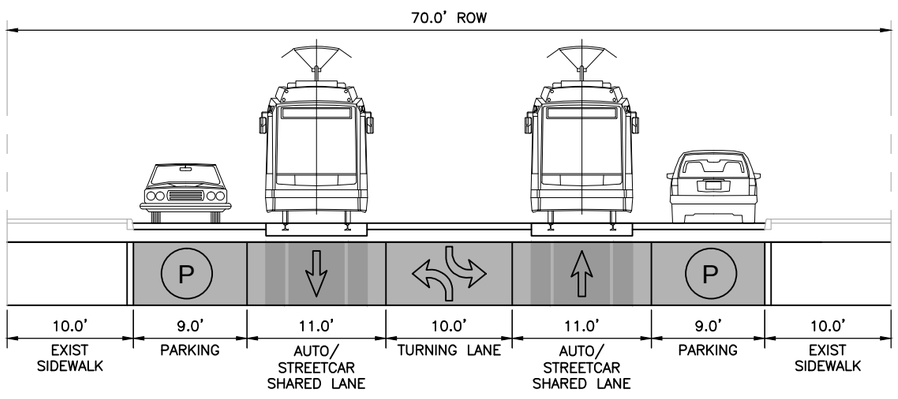

SECTION C-C (AT MID-BLOCK)

NICOLLET AVENUE (29TH ST TO 15TH ST)

NOTE:
EXISTING CURB–TO–CURB WIDTH TO BE MAINTAINED

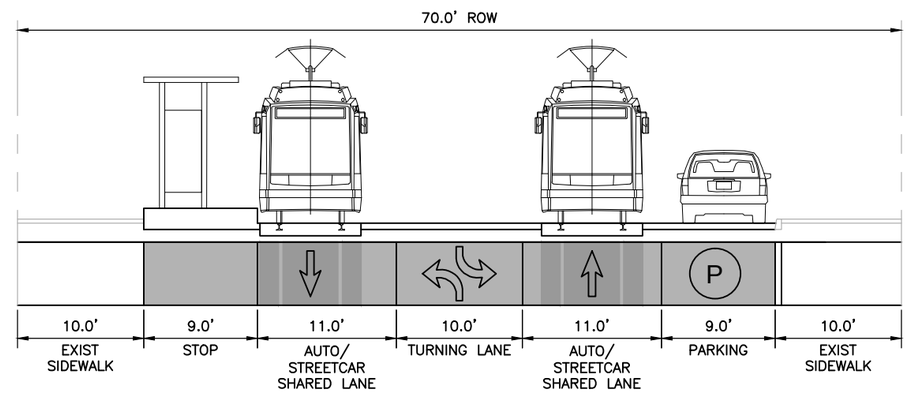

SECTION D-D (AT STOP)

NICOLLET AVENUE (29TH ST TO 15TH ST)

URS

Minneapolis City of Lakes

NICOLLET-CENTRAL MODERN STREETCAR
ENVIRONMENTAL ASSESSMENT
(LAKE STREET TO CENTRAL AVENUE MOS)
NICOLLET AVENUE

LEGEND:

- TRACK ALIGNMENT
- PROPOSED CURB WORK
- DIRECTION OF TRAVEL
- EXISTING TRAFFIC SIGNAL (NO IMPROVEMENTS)
- MODIFY EXISTING TRAFFIC SIGNAL
- PROPOSED TRAFFIC SIGNAL
- TRANSIT ONLY TRAFFIC SIGNAL PHASE
- EXISTING BUS STOP
- PROPOSED STREETCAR STOP

100' 50' 0 100'
SCALE: 1" = 100'

Scale: 1"=100'
Date: NOVEMBER 2014
Sheet No.: 03

O:\25698074 Nicollet Central Streetcar\5000 Technical\CADD\dwg\NCS Concept Design (Review Set).dwg, 11/24/2014 11:26:24 AM, Robin_Tiehhema

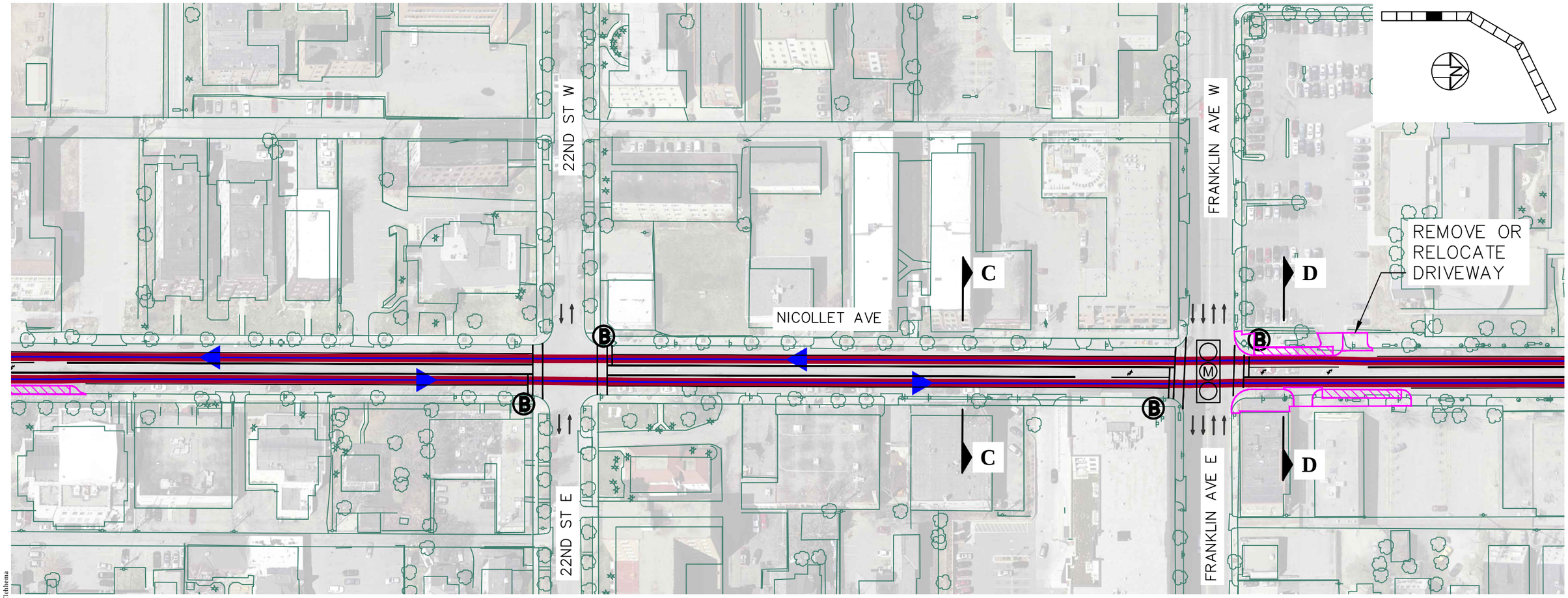

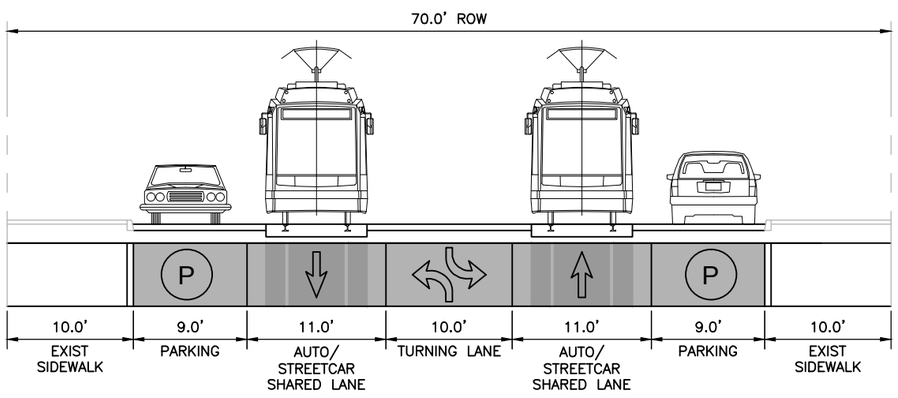

SECTION C-C (AT MID-BLOCK)

NICOLLET AVENUE (29TH ST TO 15TH ST)

NOTE:
EXISTING CURB–TO–CURB WIDTH TO BE MAINTAINED

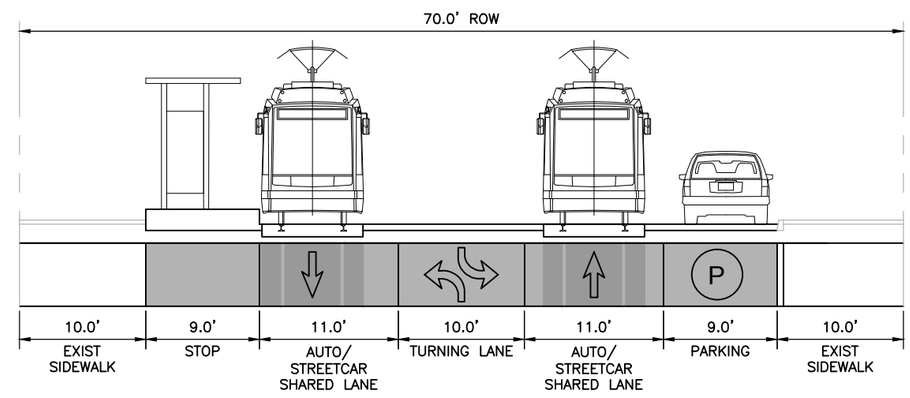

SECTION D-D (AT STOP)

NICOLLET AVENUE (29TH ST TO 15TH ST)

URS

Minneapolis City of Lakes

NICOLLET-CENTRAL MODERN STREETCAR
ENVIRONMENTAL ASSESSMENT
(LAKE STREET TO CENTRAL AVENUE MOS)
NICOLLET AVENUE

LEGEND:

- TRACK ALIGNMENT
- PROPOSED CURB WORK
- DIRECTION OF TRAVEL
- EXISTING TRAFFIC SIGNAL (NO IMPROVEMENTS)
- MODIFY EXISTING TRAFFIC SIGNAL
- PROPOSED TRAFFIC SIGNAL
- TRANSIT ONLY TRAFFIC SIGNAL PHASE
- EXISTING BUS STOP
- PROPOSED STREETCAR STOP

100' 50' 0 100'
SCALE: 1" = 100'

Scale: 1"=100'
Date: NOVEMBER 2014
Sheet No.: 04

O:\25698074 Nicollet Central Streetcar\5000 Technical\CADD\dwg\NCS Concept Design (Review Set).dwg, 11/24/2014 11:26:56 AM, Robin_Tiehhema

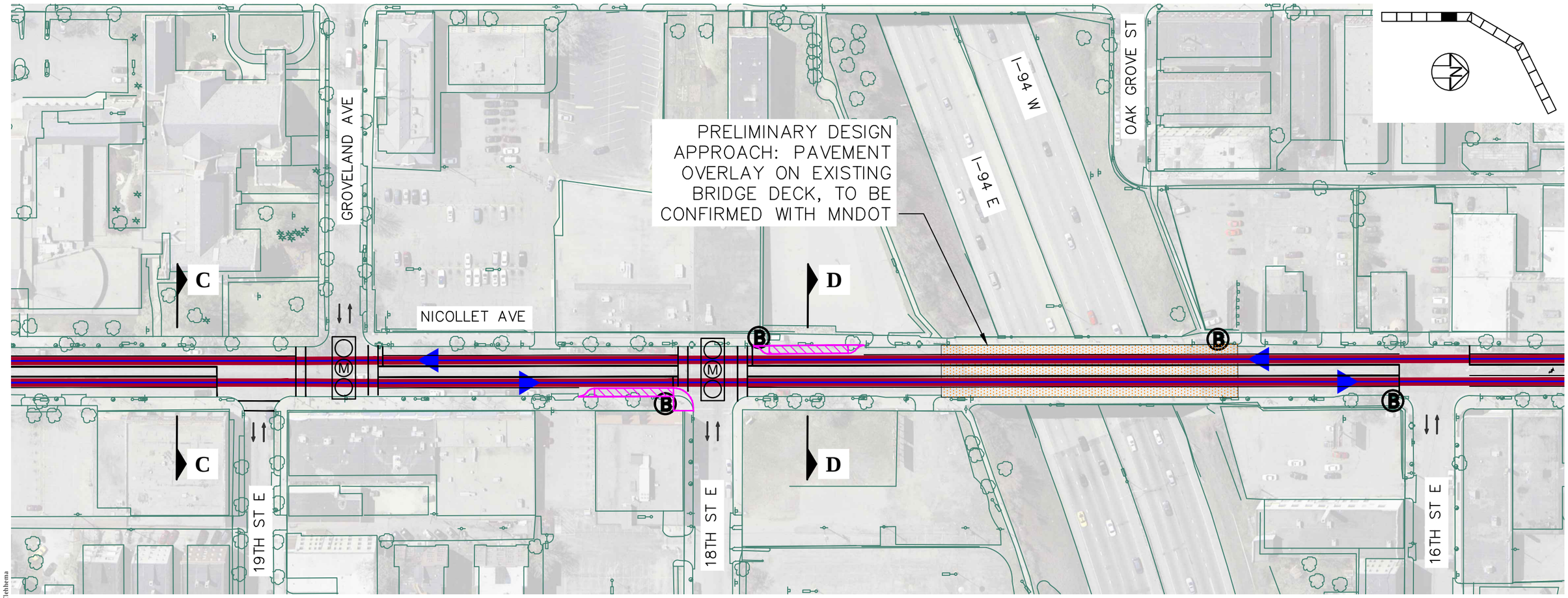

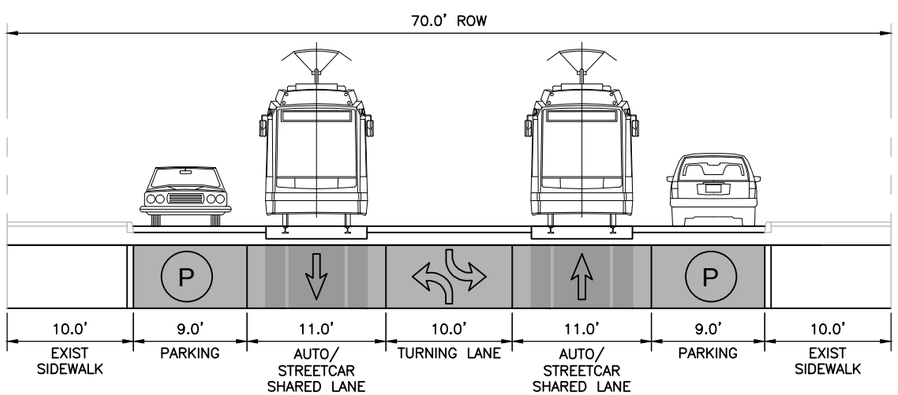

SECTION C-C (AT MID-BLOCK)

NICOLLET AVENUE (29TH ST TO 15TH ST)

NOTE:
EXISTING CURB–TO–CURB WIDTH TO BE MAINTAINED

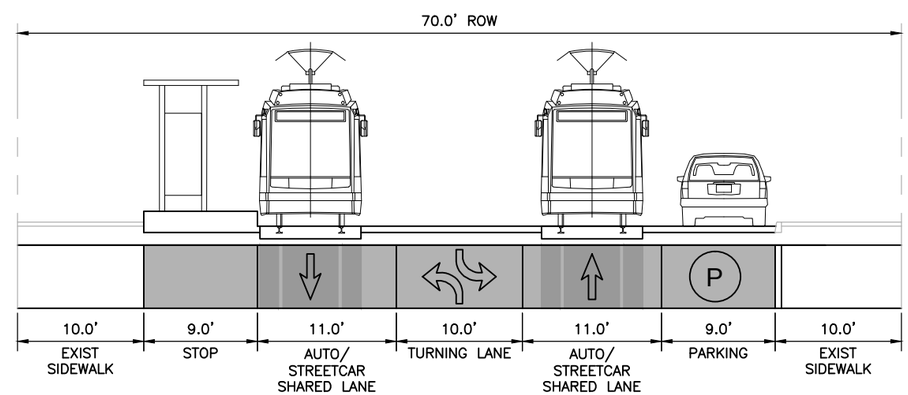

SECTION D-D (AT STOP)

NICOLLET AVENUE (29TH ST TO 15TH ST)

URS

Minneapolis City of Lakes

NICOLLET-CENTRAL MODERN STREETCAR
ENVIRONMENTAL ASSESSMENT
(LAKE STREET TO CENTRAL AVENUE MOS)
NICOLLET AVENUE

LEGEND:

- TRACK ALIGNMENT
- PROPOSED CURB WORK
- DIRECTION OF TRAVEL
- EXISTING TRAFFIC SIGNAL (NO IMPROVEMENTS)
- MODIFY EXISTING TRAFFIC SIGNAL
- PROPOSED TRAFFIC SIGNAL
- TRANSIT ONLY TRAFFIC SIGNAL PHASE
- EXISTING BUS STOP
- PROPOSED STREETCAR STOP

100' 50' 0 100'
SCALE: 1" = 100'

Scale: 1"=100'
Date: NOVEMBER 2014
Sheet No.: 05

O:\25698074 Nicollet Central Streetcar\5000 Technical\CADD\dwg\NCS Concept Design (Review Set).dwg, 11/24/2014 11:27:28 AM, Robin_Tiehhema

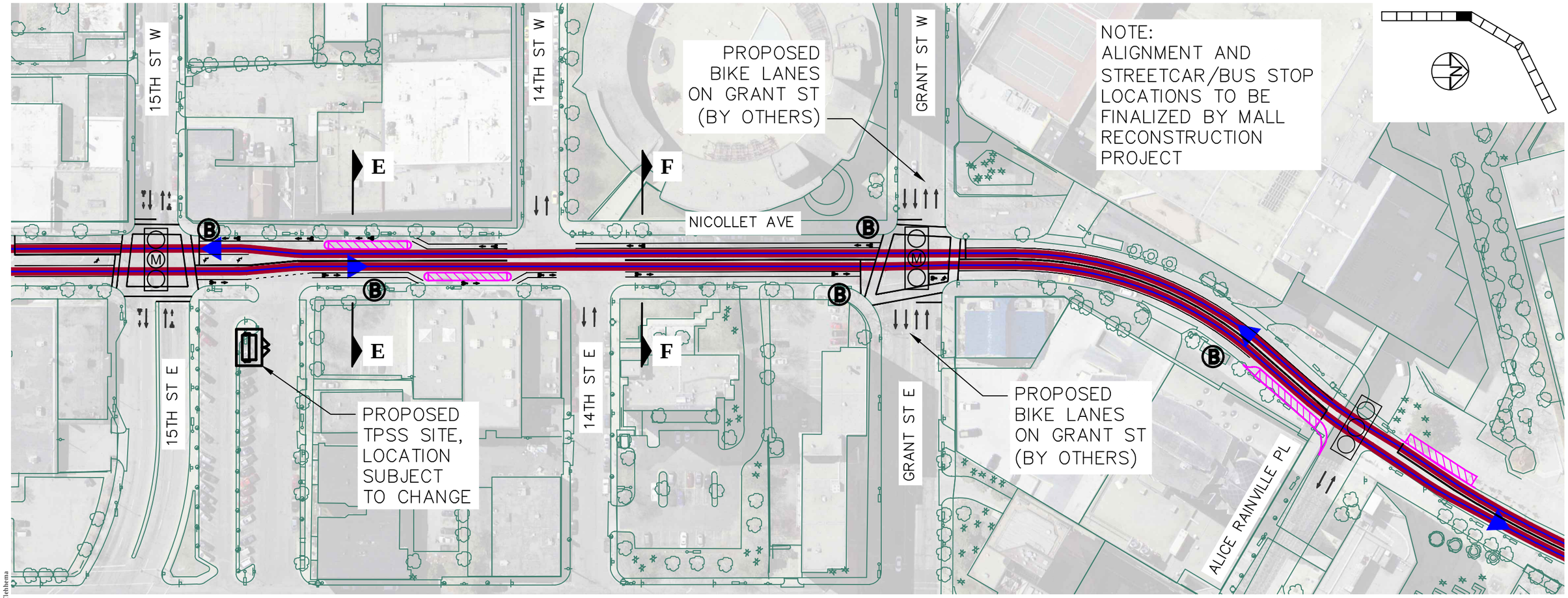

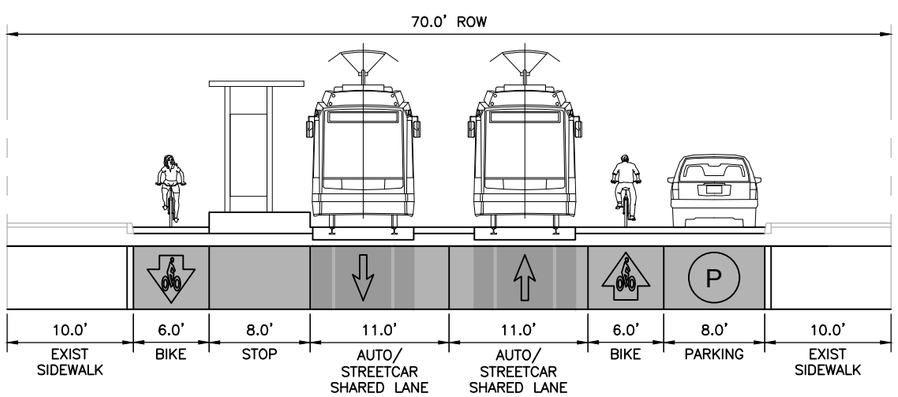

SECTION E-E (AT STOP)

NICOLLET AVENUE (15TH ST TO GRANT ST)

NOTE:
EXISTING CURB–TO–CURB WIDTH TO BE MAINTAINED

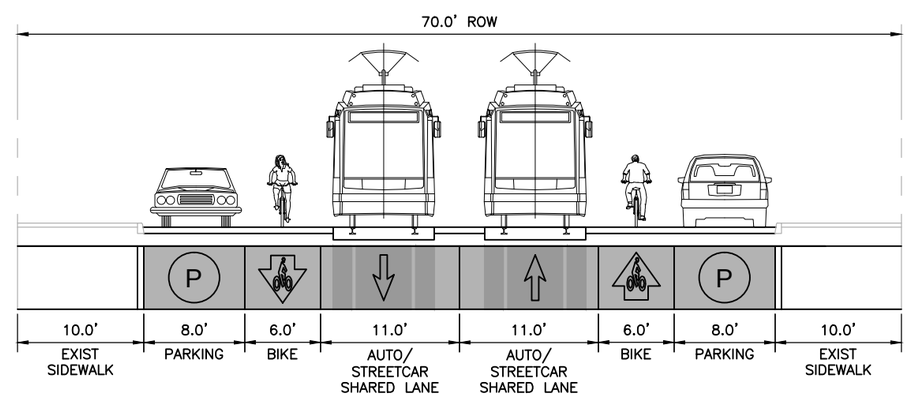

SECTION F-F (MID-BLOCK)

NICOLLET AVENUE (15TH ST TO GRANT ST)

URS

Minneapolis City of Lakes

NICOLLET-CENTRAL MODERN STREETCAR ENVIRONMENTAL ASSESSMENT
(LAKE STREET TO CENTRAL AVENUE MOS)
NICOLLET AVENUE

LEGEND:

- TRACK ALIGNMENT
- PROPOSED CURB WORK
- DIRECTION OF TRAVEL
- EXISTING TRAFFIC SIGNAL (NO IMPROVEMENTS)
- MODIFY EXISTING TRAFFIC SIGNAL
- PROPOSED TRAFFIC SIGNAL
- TRANSIT ONLY TRAFFIC SIGNAL PHASE
- EXISTING BUS STOP
- PROPOSED STREETCAR STOP

100' 50' 0 100'
SCALE: 1" = 100'

Scale: 1"=100'
Date: NOVEMBER 2014
Sheet No.: 06

O:\25698074 Nicollet Central Streetcar\5000 Technical\CADD\dwg\NCS Concept Design (Review Set).dwg, 11/24/2014 11:28:01 AM, Robin_Tiehhema

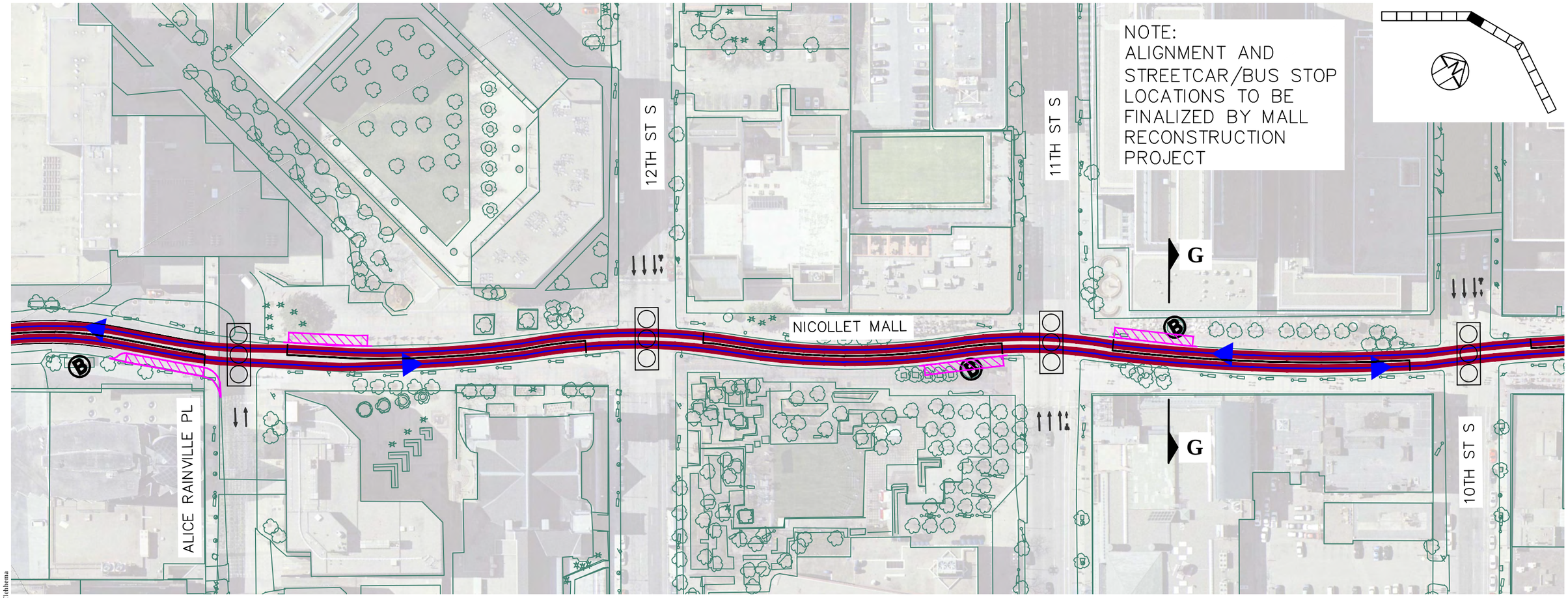

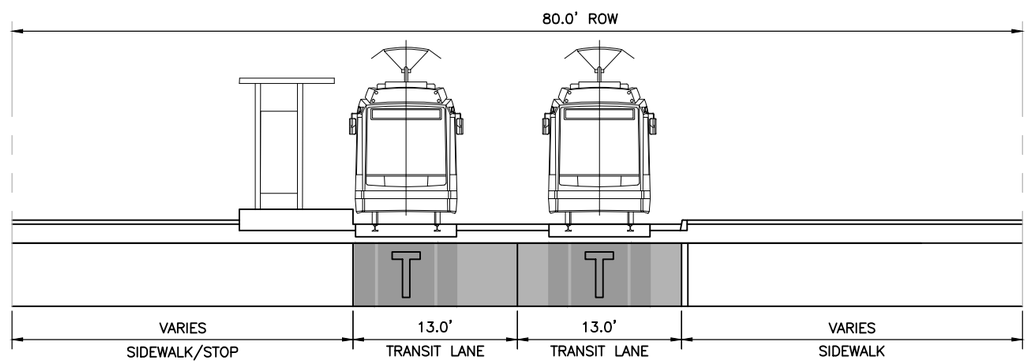

NOTE:
CROSS-SECTION AND STOP LOCATIONS TO BE FINALIZED BY MALL RECONSTRUCTION PROJECT

SECTION G-G

NICOLLET MALL (GRANT ST TO 3RD ST)

O:\25639074 Nicollet Central Streetcar\5000 Technical\CADD\dwg\NCS Concept Design (Review Set).dwg, 11/24/2014 11:28:33 AM, Robin_Tiehbema

URS

Minneapolis City of Lakes

NICOLLET-CENTRAL MODERN STREETCAR
ENVIRONMENTAL ASSESSMENT
(LAKE STREET TO CENTRAL AVENUE MOS)
NICOLLET AVENUE

LEGEND:

- TRACK ALIGNMENT
- PROPOSED CURB WORK
- DIRECTION OF TRAVEL
- EXISTING TRAFFIC SIGNAL (NO IMPROVEMENTS)
- MODIFY EXISTING TRAFFIC SIGNAL
- PROPOSED TRAFFIC SIGNAL
- TRANSIT ONLY TRAFFIC SIGNAL PHASE
- EXISTING BUS STOP
- PROPOSED STREETCAR STOP

100' 50' 0 100'
SCALE: 1" = 100'

Scale: 1"=100'
Date: NOVEMBER 2014
Sheet No.: 07

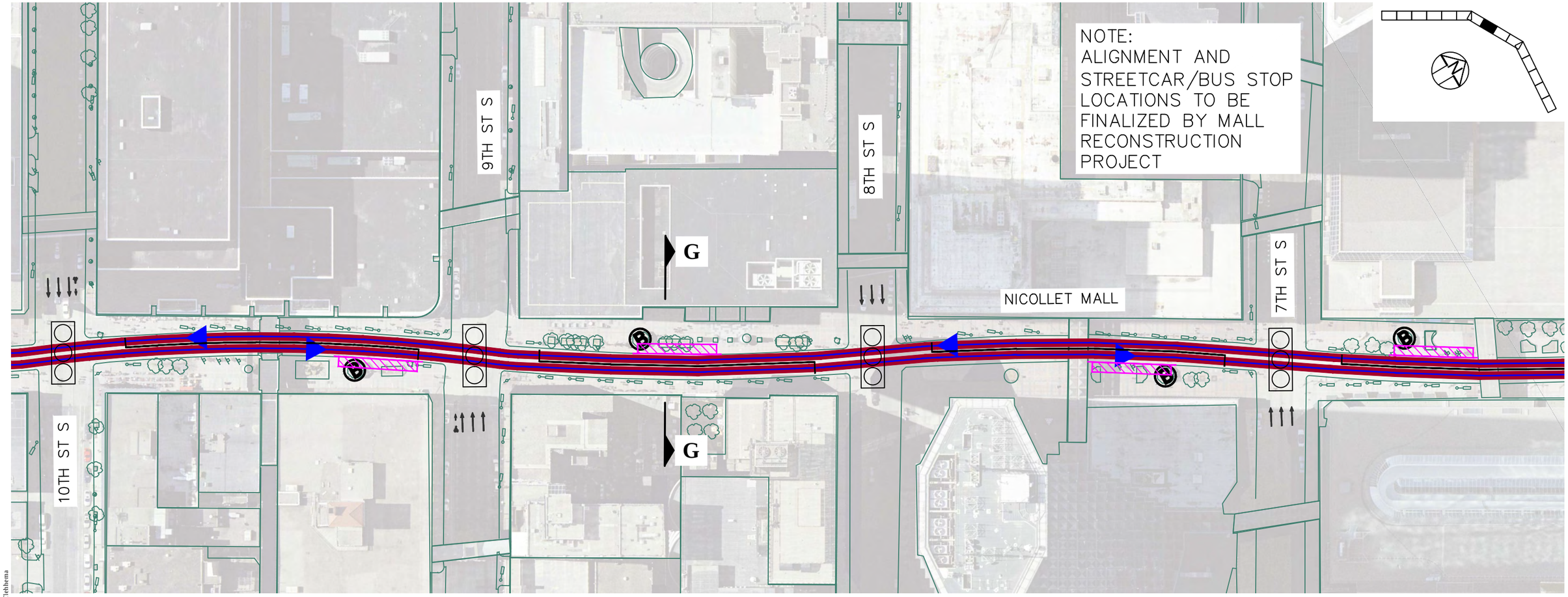

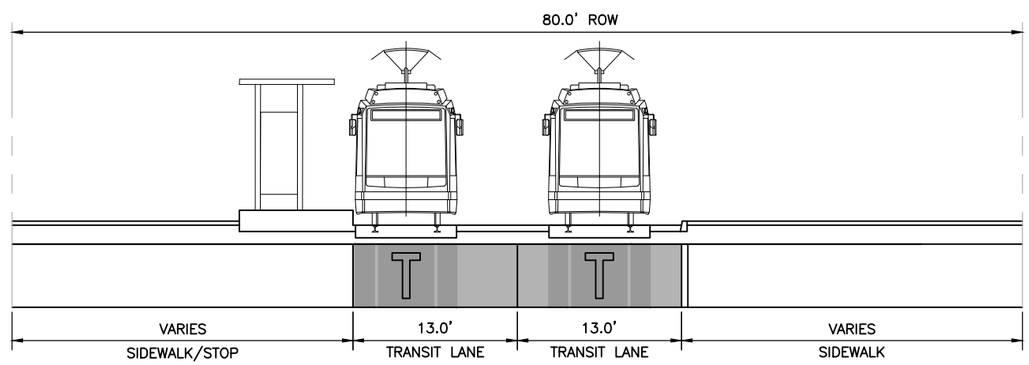

NOTE:
CROSS-SECTION AND STOP LOCATIONS TO BE FINALIZED BY MALL RECONSTRUCTION PROJECT

SECTION G-G

NICOLLET MALL (GRANT ST TO 3RD ST)

O:\25698074 Nicollet Central Streetcar\5000 Technical\CADD\dwg\NCS Concept Design (Review Set).dwg, 11/24/2014 11:28:56 AM, Robin_Tiehhema

URS

Minneapolis City of Lakes

NICOLLET-CENTRAL MODERN STREETCAR
ENVIRONMENTAL ASSESSMENT
(LAKE STREET TO CENTRAL AVENUE MOS)
NICOLLET AVENUE

LEGEND:

- TRACK ALIGNMENT
- PROPOSED CURB WORK
- DIRECTION OF TRAVEL
- EXISTING TRAFFIC SIGNAL (NO IMPROVEMENTS)
- MODIFY EXISTING TRAFFIC SIGNAL
- PROPOSED TRAFFIC SIGNAL
- TRANSIT ONLY TRAFFIC SIGNAL PHASE
- EXISTING BUS STOP
- PROPOSED STREETCAR STOP

100' 50' 0 100'
SCALE: 1" = 100'

Scale: 1"=100'
Date: NOVEMBER 2014
Sheet No.: 08

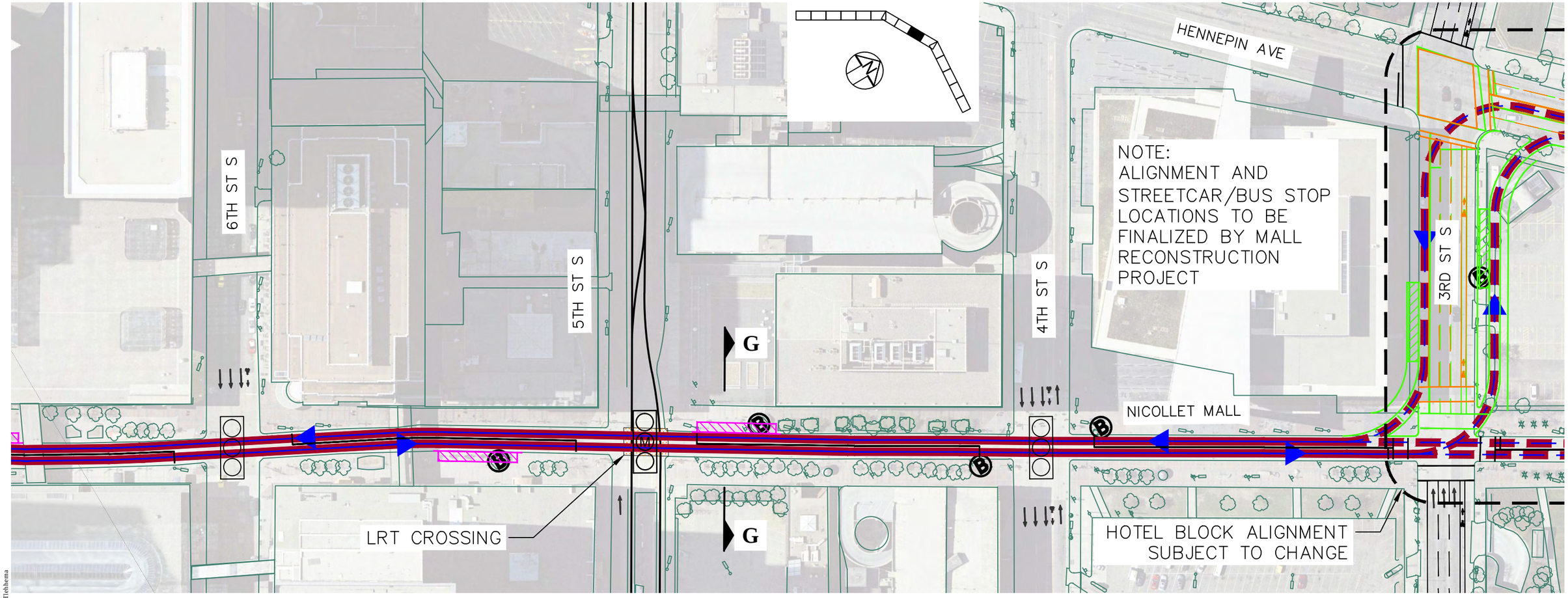

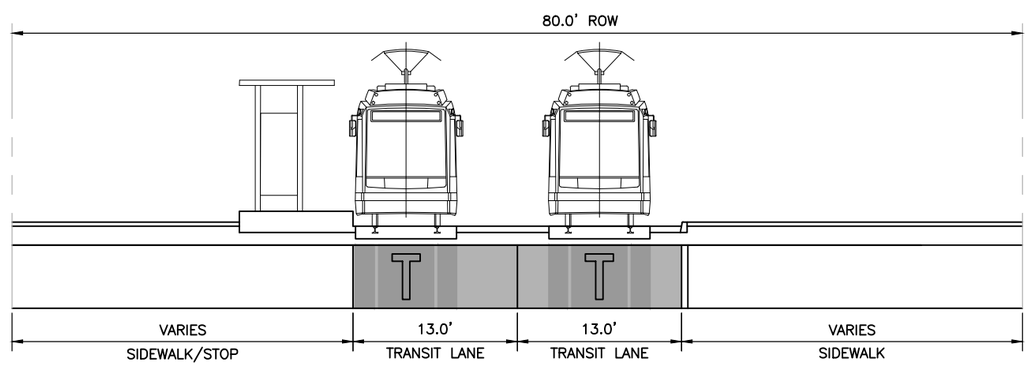

NOTE:
CROSS-SECTION AND STOP LOCATIONS TO BE FINALIZED BY MALL RECONSTRUCTION PROJECT

SECTION G-G

NICOLLET MALL (GRANT ST TO 3RD ST)

O:\25698074 Nicollet Central Streetcar\5000 Technical\CADD\dwg\NCS Concept Design (Review Set).dwg, 11/24/2014 11:29:20 AM, Robin_Tiehema

URS

Minneapolis City of Lakes

NICOLLET-CENTRAL MODERN STREETCAR
ENVIRONMENTAL ASSESSMENT
(LAKE STREET TO CENTRAL AVENUE MOS)
NICOLLET AVENUE

LEGEND:

- TRACK ALIGNMENT
- PROPOSED CURB WORK
- DIRECTION OF TRAVEL
- EXISTING TRAFFIC SIGNAL (NO IMPROVEMENTS)
- MODIFY EXISTING TRAFFIC SIGNAL
- PROPOSED TRAFFIC SIGNAL
- TRANSIT ONLY TRAFFIC SIGNAL PHASE
- EXISTING BUS STOP
- PROPOSED STREETCAR STOP

100' 50' 0 100'
SCALE: 1" = 100'

Scale: 1"=100'
Date: NOVEMBER 2014
Sheet No.: 09

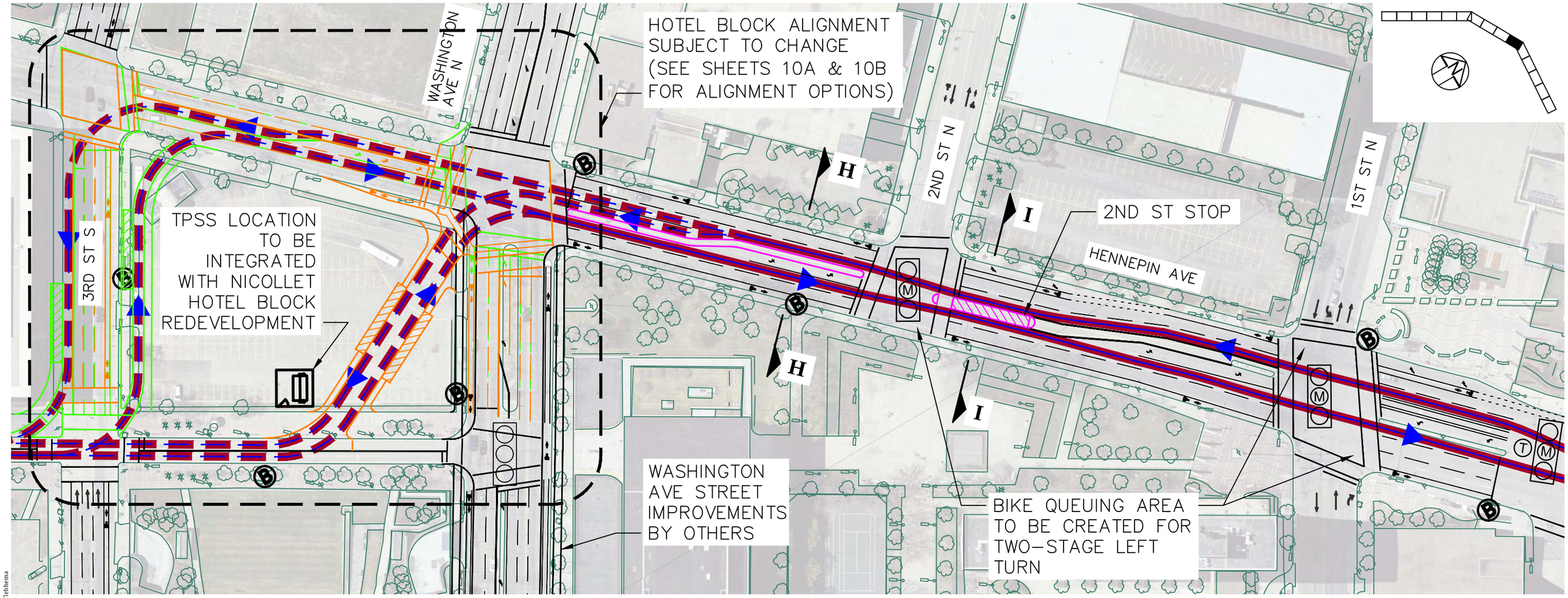

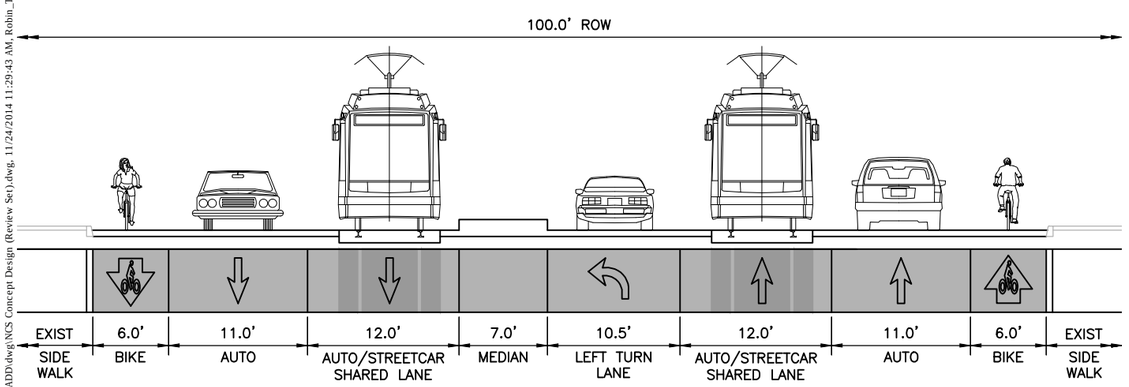

SECTION H-H

HENNEPIN AVENUE (WASHINGTON AVE TO 2ND ST)

NOTE:
EXISTING CURB-TO-CURB WIDTH TO BE MAINTAINED

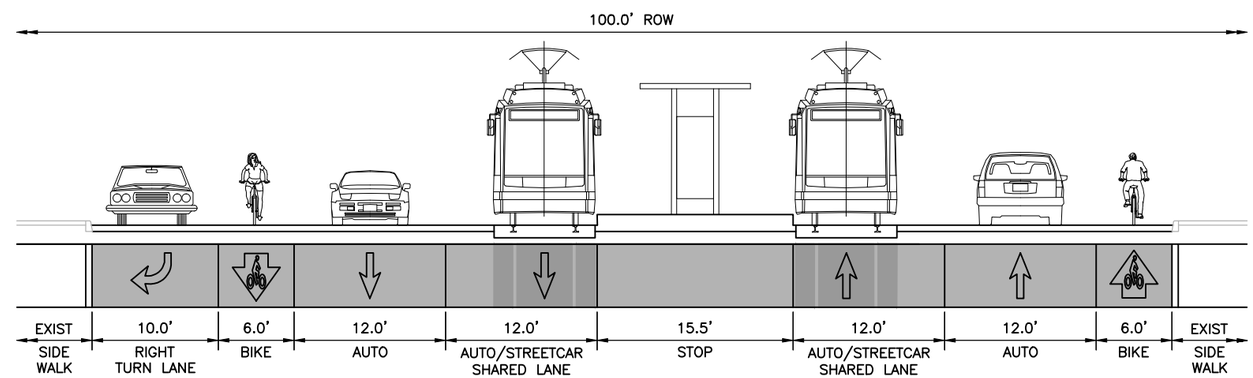

SECTION I-I

HENNEPIN AVENUE (2ND ST TO 1ST ST)

URS

Minneapolis City of Lakes

NICOLLET-CENTRAL MODERN STREETCAR
ENVIRONMENTAL ASSESSMENT
(LAKE STREET TO CENTRAL AVENUE MOS)
HENNEPIN AVENUE

LEGEND:

- TRACK ALIGNMENT
- PROPOSED CURB WORK
- DIRECTION OF TRAVEL
- EXISTING TRAFFIC SIGNAL (NO IMPROVEMENTS)
- MODIFY EXISTING TRAFFIC SIGNAL
- PROPOSED TRAFFIC SIGNAL
- TRANSIT ONLY TRAFFIC SIGNAL PHASE
- EXISTING BUS STOP
- PROPOSED STREETCAR STOP

100' 50' 0 100'
SCALE: 1" = 100'

Scale: 1"=100'
Date: NOVEMBER 2014
Sheet No.: 10

O:\25698074 Nicollet Central Streetcar\5000 Technical\CADD\dwg\NCS Concept Design (Review Set).dwg, 11/24/2014 11:29:43 AM, Robin_Tiehhema

POTENTIAL CONNECTION FOR FUTURE BROADWAY STREETCAR CORRIDOR

HENNEPIN AVE

SHARED STREETCAR AND BUS PLATFORM AREA, PEDESTRIAN ACCESS AT DESIGNATED CROSSING LOCATIONS TO BE DETERMINED DURING DESIGN PHASE

STREETCAR ONLY

FUTURE DEVELOPMENT TO INCORPORATE STREETCAR TRACTION POWER SUBSTATION

SIDEWALK

MODIFY LIBRARY FRONTAGE FOR SIDEWALK EASEMENT

ROADWAY TO BE WIDENED 3 FT

3RD ST S

WASHINGTON AVE S

NICOLLET MALL

B

B

B

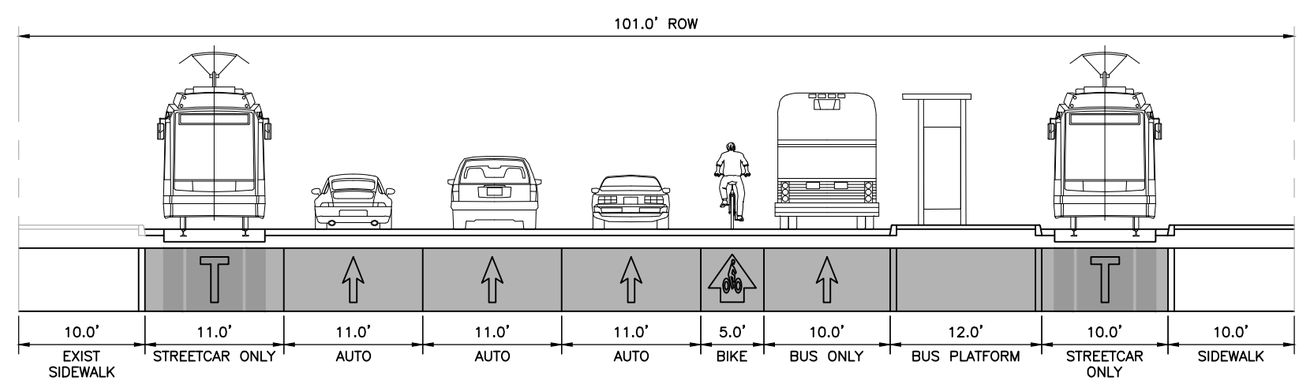

SECTION B-B (OPTION 4A)

3RD STREET (HENNEPIN AVE TO NICOLLET MALL)

O:\25698074 Nicollet Central Streetcar\5000 Technical\CADD\dwg\NCS Concept Design (10A_10B).dwg, 11/24/2014 11:30:23 AM, Robin_Tiehhema

URS

Minneapolis City of Lakes

NICOLLET-CENTRAL MODERN STREETCAR
ENVIRONMENTAL ASSESSMENT
HOTEL BLOCK ALIGNMENTS
OPTION 4A: IN 3RD STREET WITH CYCLE TRACK

LEGEND:

- TRACK ALIGNMENT
- PROPOSED CURB WORK
- DIRECTION OF TRAVEL
- EXISTING TRAFFIC SIGNAL (NO IMPROVEMENTS)
- MODIFY EXISTING TRAFFIC SIGNAL
- PROPOSED TRAFFIC SIGNAL
- TRANSIT ONLY TRAFFIC SIGNAL PHASE
- EXISTING BUS STOP
- PROPOSED STREETCAR STOP

50' 25' 0 50'
SCALE: 1" = 50'

Scale: 1"=50'
Date: NOVEMBER 2014
Sheet No.: 10A

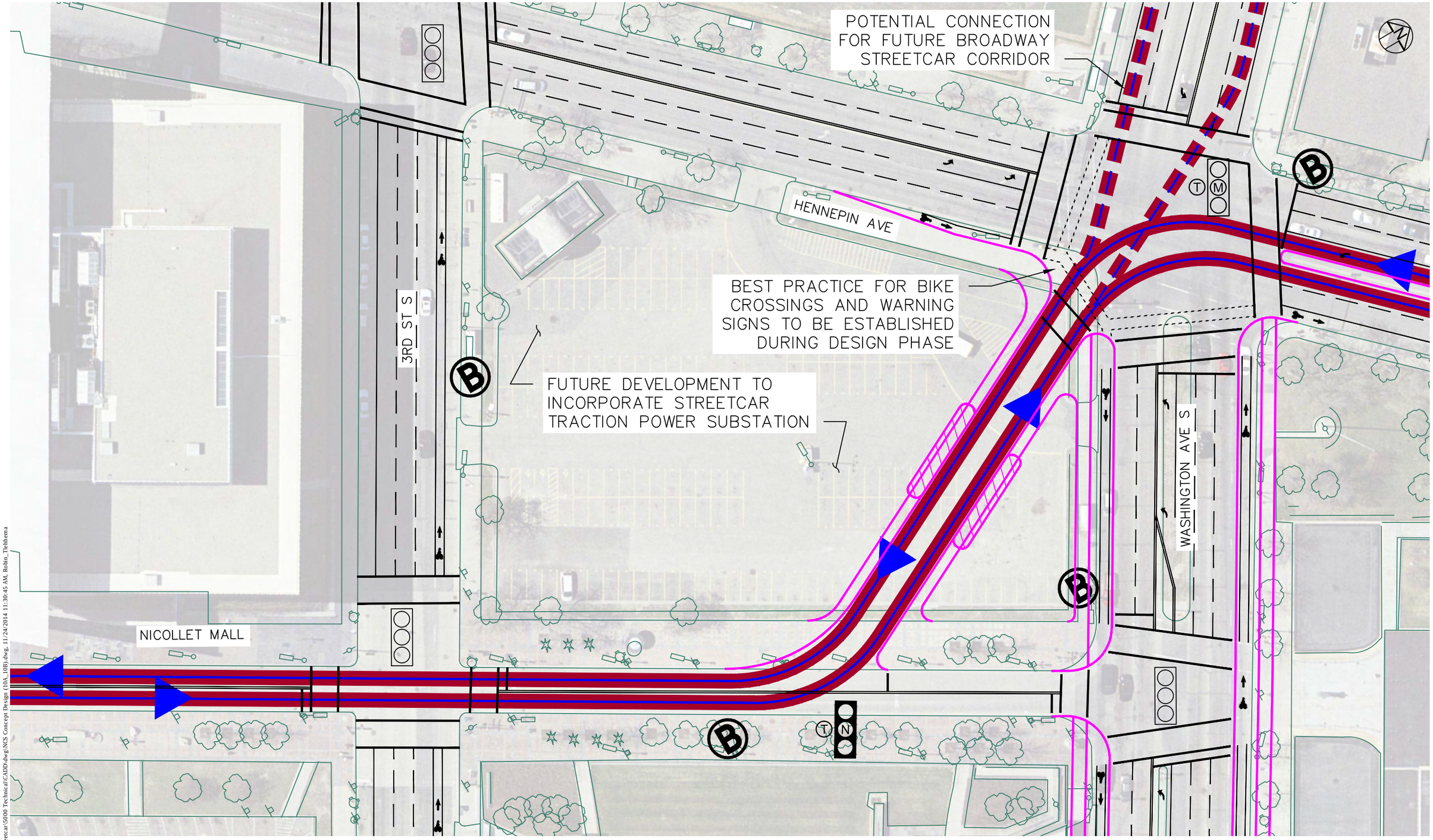

O:\25698074 Nicollet Central Streetcar\5000 Technical\CADD\dwg\NCS Concept Design (10A_10B).dwg, 11/24/2014 11:30:45 AM, Robin_Tiehhema

URS

Minneapolis City of Lakes

NICOLLET-CENTRAL MODERN STREETCAR
ENVIRONMENTAL ASSESSMENT
HOTEL BLOCK ALIGNMENTS
OPTION 6A: DIAGONAL

LEGEND:

- TRACK ALIGNMENT
- PROPOSED CURB WORK
- DIRECTION OF TRAVEL
- EXISTING TRAFFIC SIGNAL (NO IMPROVEMENTS)
- MODIFY EXISTING TRAFFIC SIGNAL
- PROPOSED TRAFFIC SIGNAL
- TRANSIT ONLY TRAFFIC SIGNAL PHASE
- EXISTING BUS STOP
- PROPOSED STREETCAR STOP

50' 25' 0 50'
SCALE: 1" = 50'

Scale: 1"=50'
Date: NOVEMBER 2014
Sheet No.: 10B

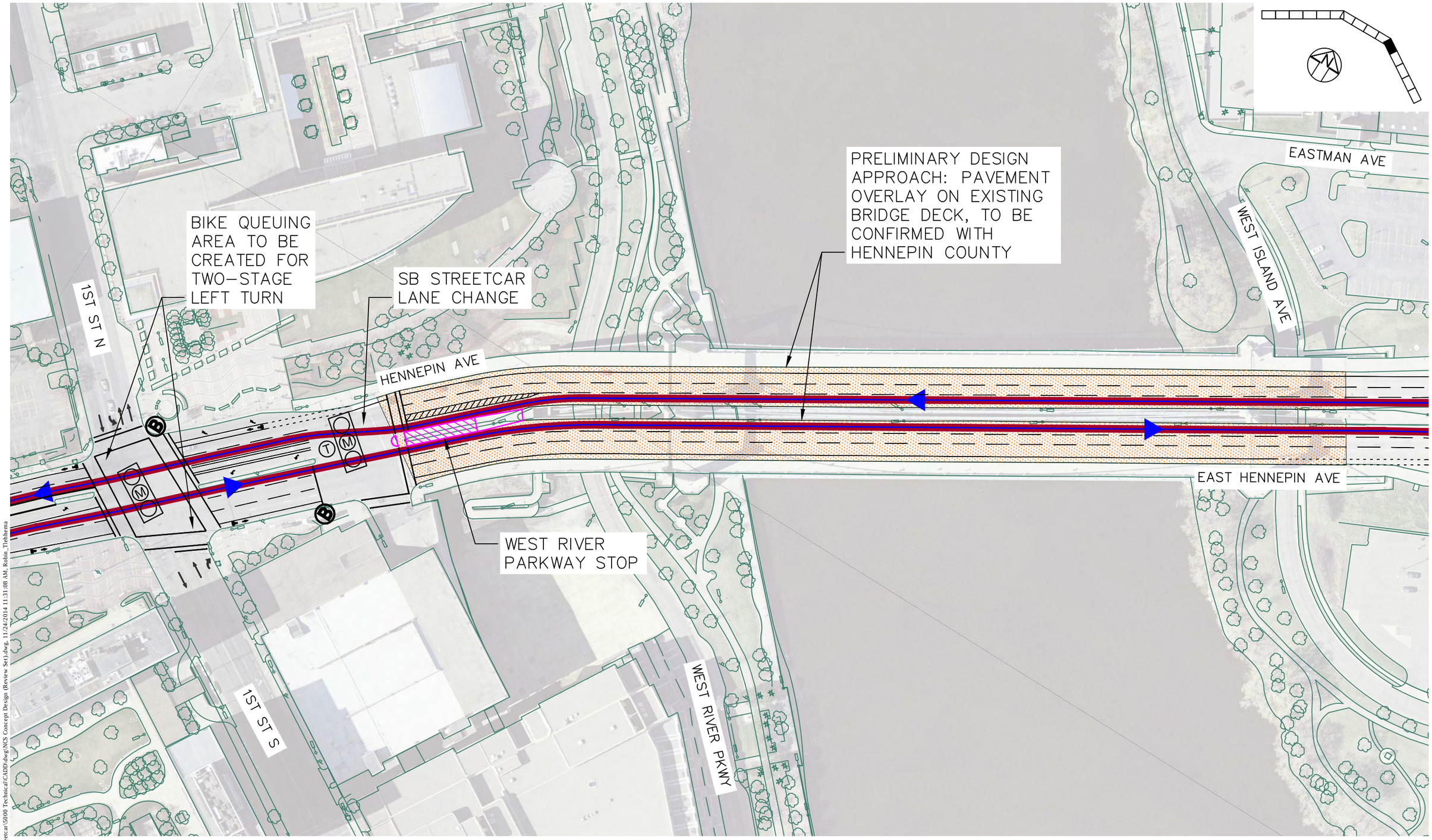

O:\25698074 Nicollet Central Streetcar\5000 Technical\CADD\dwg\NCS Concept Design (Review Set).dwg, 11/24/2014 11:31:08 AM, Robin_Tiabhema

URS

Minneapolis City of Lakes

NICOLLET-CENTRAL MODERN STREETCAR
ENVIRONMENTAL ASSESSMENT
(LAKE STREET TO CENTRAL AVENUE MOS)
HENNEPIN AVENUE

LEGEND:

- TRACK ALIGNMENT
- PROPOSED CURB WORK
- DIRECTION OF TRAVEL
- EXISTING TRAFFIC SIGNAL (NO IMPROVEMENTS)
- MODIFY EXISTING TRAFFIC SIGNAL
- PROPOSED TRAFFIC SIGNAL
- TRANSIT ONLY TRAFFIC SIGNAL PHASE
- EXISTING BUS STOP
- PROPOSED STREETCAR STOP

100' 50' 0 100'
SCALE: 1" = 100'

Scale: 1"=100'
Date: NOVEMBER 2014
Sheet No.: 11

GROVE ST

BIKE LANES PROPOSED ON MAIN ST (BY OTHERS)

PRELIMINARY DESIGN APPROACH: PAVEMENT OVERLAY ON EXISTING BRIDGE DECK, TO BE CONFIRMED WITH HENNEPIN COUNTY

EASTMAN AVE

EAST ISLAND AVE

1ST AVE NE

PRELIMINARY DESIGN APPROACH: PAVEMENT OVERLAY ON EXISTING BRIDGE DECK, TO BE CONFIRMED WITH HENNEPIN COUNTY

WEST ISLAND AVE

DE LASALLE DR

PEDESTRIAN CONNECTIONS (UNDER BOTH BRIDGE DECKS)

MAIN ST NE

APPROXIMATE ROADWAY REGRADING LIMITS

2ND ST NE

PROPOSED TPSS SITE, LOCATION SUBJECT TO CHANGE

EAST HENNEPIN AVE

EAST HENNEPIN AVE

NICOLLET ISLAND STOPS

WILDER ST

PRELIMINARY DESIGN APPROACH: PAVEMENT OVERLAY ON EXISTING BRIDGE DECK, TO BE CONFIRMED WITH HENNEPIN COUNTY

LOURDES PL

BIKE LANES PROPOSED ON MAIN ST (BY OTHERS)

2ND ST SE

O:\25639074 Nicollet Central Streetcar\5000 Technical\CADD\dwg\NCS Concept Design (Review Set).dwg, 11/24/2014 11:31:22 AM, Robin_Tiehbema

URS

Minneapolis City of Lakes

NICOLLET-CENTRAL MODERN STREETCAR
ENVIRONMENTAL ASSESSMENT
(LAKE STREET TO CENTRAL AVENUE MOS)
HENNEPIN AVENUE/1ST AVENUE

LEGEND:

- TRACK ALIGNMENT
- PROPOSED CURB WORK
- DIRECTION OF TRAVEL
- EXISTING TRAFFIC SIGNAL (NO IMPROVEMENTS)
- MODIFY EXISTING TRAFFIC SIGNAL
- PROPOSED TRAFFIC SIGNAL
- TRANSIT ONLY TRAFFIC SIGNAL PHASE
- EXISTING BUS STOP
- PROPOSED STREETCAR STOP

100' 50' 0 100'
SCALE: 1" = 100'

Scale: 1"=100'
Date: NOVEMBER 2014
Sheet No.: 12

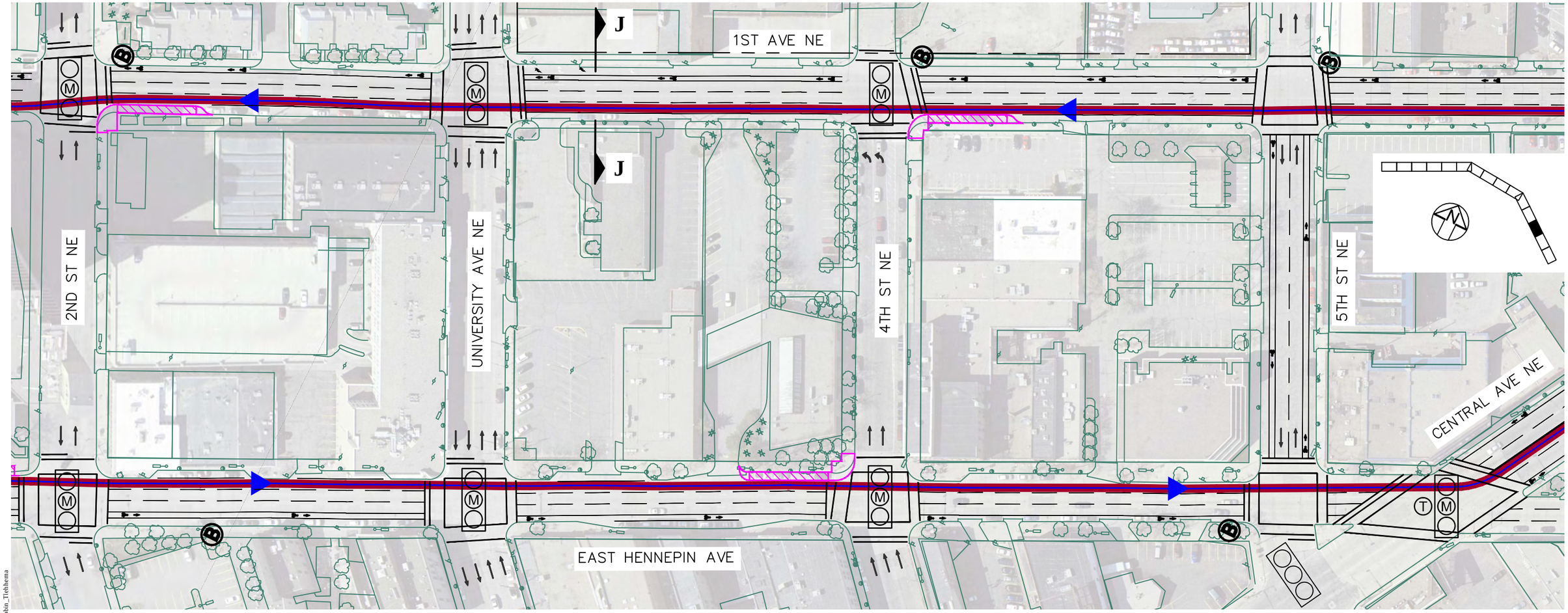

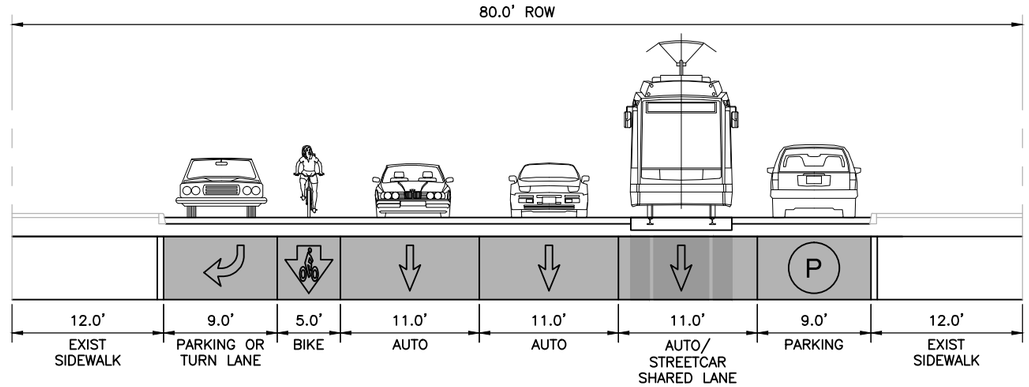

SECTION J-J

1ST AVENUE (DE LASALLE DR TO CENTRAL AVE)

NOTE:
EXISTING CURB–TO–CURB WIDTH TO BE MAINTAINED

URS

Minneapolis City of Lakes

NICOLLET-CENTRAL MODERN STREETCAR
ENVIRONMENTAL ASSESSMENT
(LAKE STREET TO CENTRAL AVENUE MOS)
HENNEPIN AVENUE/1ST AVENUE

LEGEND:

- TRACK ALIGNMENT
- PROPOSED CURB WORK
- DIRECTION OF TRAVEL
- EXISTING TRAFFIC SIGNAL (NO IMPROVEMENTS)
- MODIFY EXISTING TRAFFIC SIGNAL
- PROPOSED TRAFFIC SIGNAL
- TRANSIT ONLY TRAFFIC SIGNAL PHASE
- EXISTING BUS STOP
- PROPOSED STREETCAR STOP

100' 50' 0 100'
SCALE: 1" = 100'

Scale: 1"=100'
Date: NOVEMBER 2014
Sheet No.: 13

O:\25698074 Nicollet Central Streetcar\5000 Technical\CADD\dwg\NCS Concept Design (Review Set).dwg, 11/24/2014 11:31:36 AM, Robin_Tiehhema

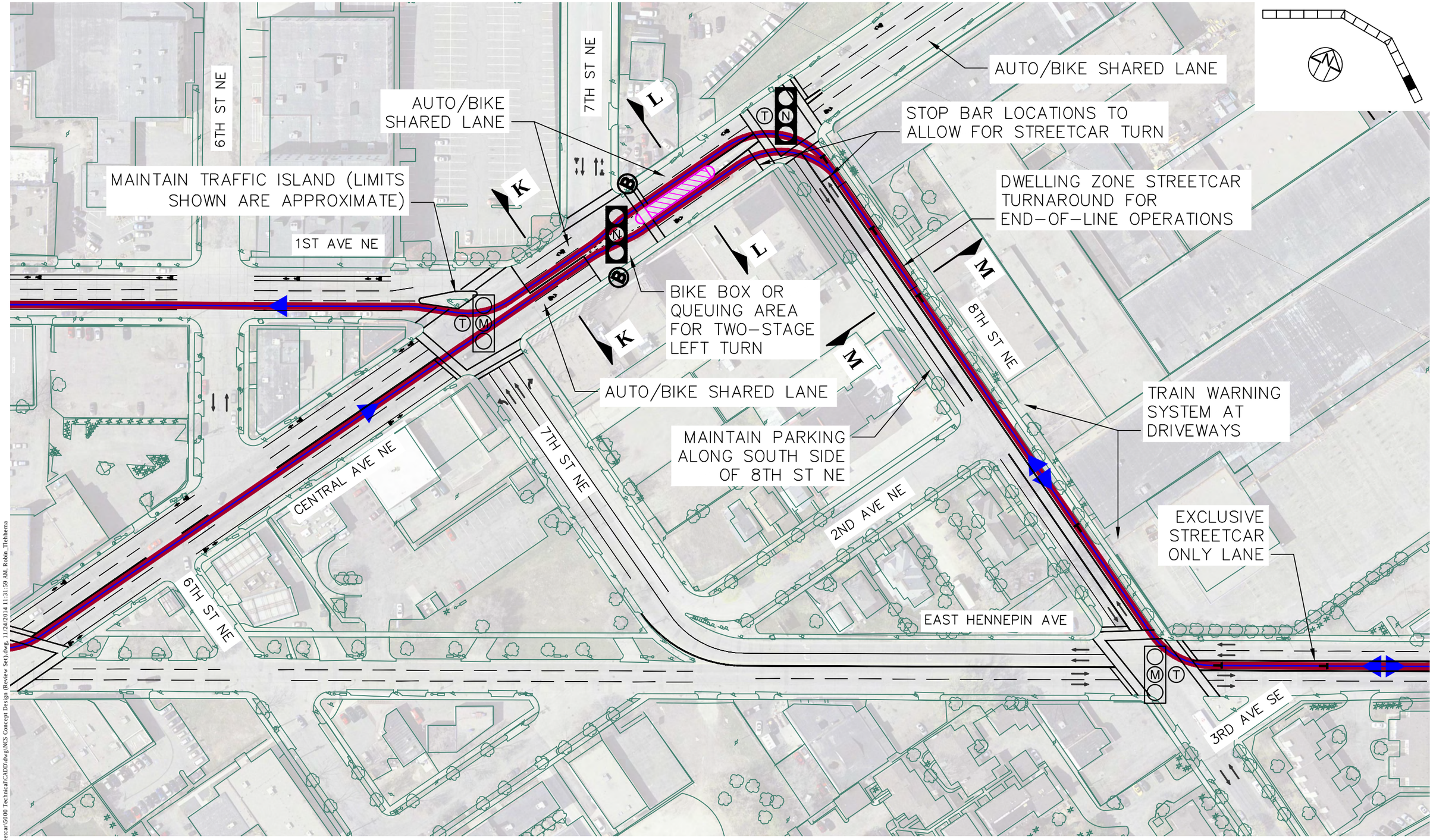

O:\25698074 Nicollet Central Streetcar\5000 Technical\CADD\dwg\NCS Concept Design (Review Set).dwg, 11/24/2014 11:31:59 AM, Robin_Tiehhena

URS

Minneapolis City of Lakes

NICOLLET-CENTRAL MODERN STREETCAR
ENVIRONMENTAL ASSESSMENT
(LAKE STREET TO CENTRAL AVENUE MOS)
CENTRAL AVENUE/8TH STREET

LEGEND:

- TRACK ALIGNMENT
- PROPOSED CURB WORK
- DIRECTION OF TRAVEL
- EXISTING TRAFFIC SIGNAL (NO IMPROVEMENTS)
- MODIFY EXISTING TRAFFIC SIGNAL
- PROPOSED TRAFFIC SIGNAL
- TRANSIT ONLY TRAFFIC SIGNAL PHASE
- EXISTING BUS STOP
- PROPOSED STREETCAR STOP

100' 50' 0 100'
SCALE: 1" = 100'

Scale: 1"=100'
Date: NOVEMBER 2014
Sheet No.: 14

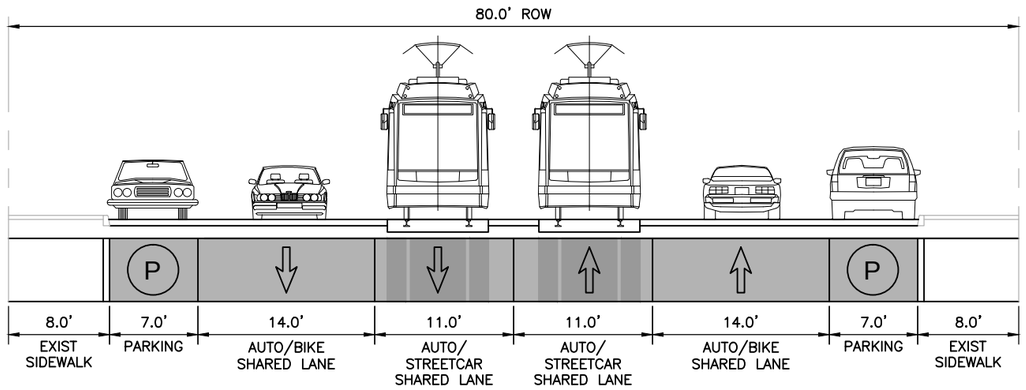

SECTION K-K

CENTRAL AVENUE (7TH ST TO 8TH ST)

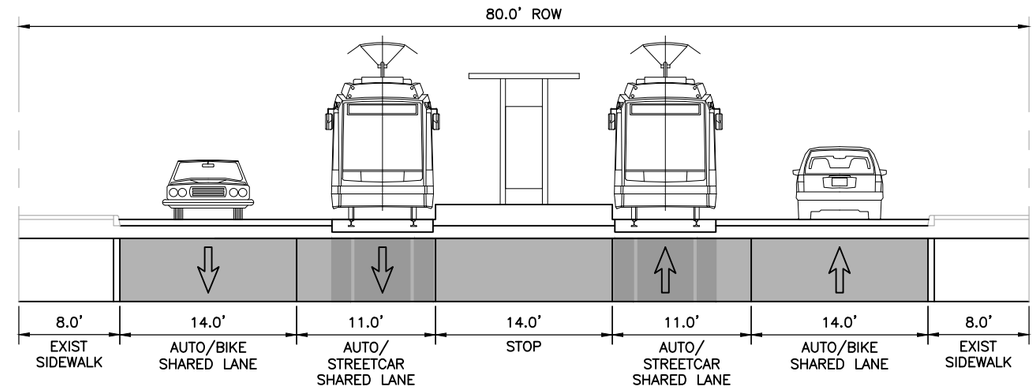

SECTION L-L

CENTRAL AVENUE (7TH ST TO 8TH ST)

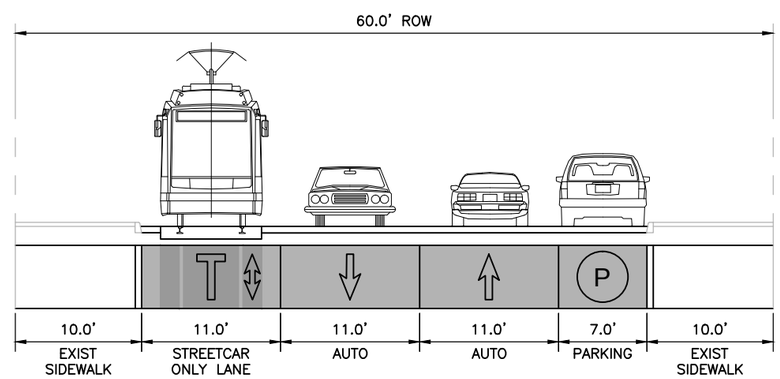

SECTION M-M

8TH STREET (CENTRAL AVE TO HENNEPIN AVE)

NOTE:
EXISTING CURB–TO–CURB
WIDTH TO BE MAINTAINED

O:\25698074 Nicollet Central Streetcar\5000 Technical\CADD\dwg\NCS Concept Design (Review Set).dwg, 11/24/2014 11:32:13 AM, Robin_Tiehhema

URS

Minneapolis
City of Lakes

NICOLLET-CENTRAL MODERN STREETCAR
ENVIRONMENTAL ASSESSMENT
(LAKE STREET TO CENTRAL AVENUE MOS)
CENTRAL AVENUE/8TH STREET

LEGEND:

- TRACK ALIGNMENT
- PROPOSED CURB WORK
- DIRECTION OF TRAVEL
- EXISTING TRAFFIC SIGNAL (NO IMPROVEMENTS)
- MODIFY EXISTING TRAFFIC SIGNAL
- PROPOSED TRAFFIC SIGNAL
- TRANSIT ONLY TRAFFIC SIGNAL PHASE
- EXISTING BUS STOP
- PROPOSED STREETCAR STOP

100' 50' 0 100'
SCALE: 1" = 100'

Scale: 1"=12'
Date: NOVEMBER 2014
Sheet No.: 14A

ROADWAY WIDENING LIMITS, ANGLE PARKING CONVERTED TO PARALLEL PARKING

WINTER ST NE

PROPOSED MAINTENANCE FACILITY SITE LOCATION

HARRISON ST NE

PROPOSED TPSS ON MAINTENANCE FACILITY SITE

TRAIN WARNING SYSTEM AT DRIVEWAYS

EAST HENNEPIN AVE

O:\25690074 Nicollet Central Streetcar\5000 Technical\CADD\dwg\NCS Concept Design (Review Set).dwg, 11/24/2014 11:32:44 AM, Robin_Tiehema

URS

Minneapolis City of Lakes

NICOLLET-CENTRAL MODERN STREETCAR ENVIRONMENTAL ASSESSMENT
(LAKE STREET TO CENTRAL AVENUE MOS)
HARRISON STREET

LEGEND:

- TRACK ALIGNMENT
- PROPOSED CURB WORK
- DIRECTION OF TRAVEL
- EXISTING TRAFFIC SIGNAL (NO IMPROVEMENTS)
- MODIFY EXISTING TRAFFIC SIGNAL
- PROPOSED TRAFFIC SIGNAL
- TRANSIT ONLY TRAFFIC SIGNAL PHASE
- EXISTING BUS STOP
- PROPOSED STREETCAR STOP

100' 50' 0 100'
SCALE: 1" = 100'

Scale: 1"=100'
Date: NOVEMBER 2014
Sheet No.: 15

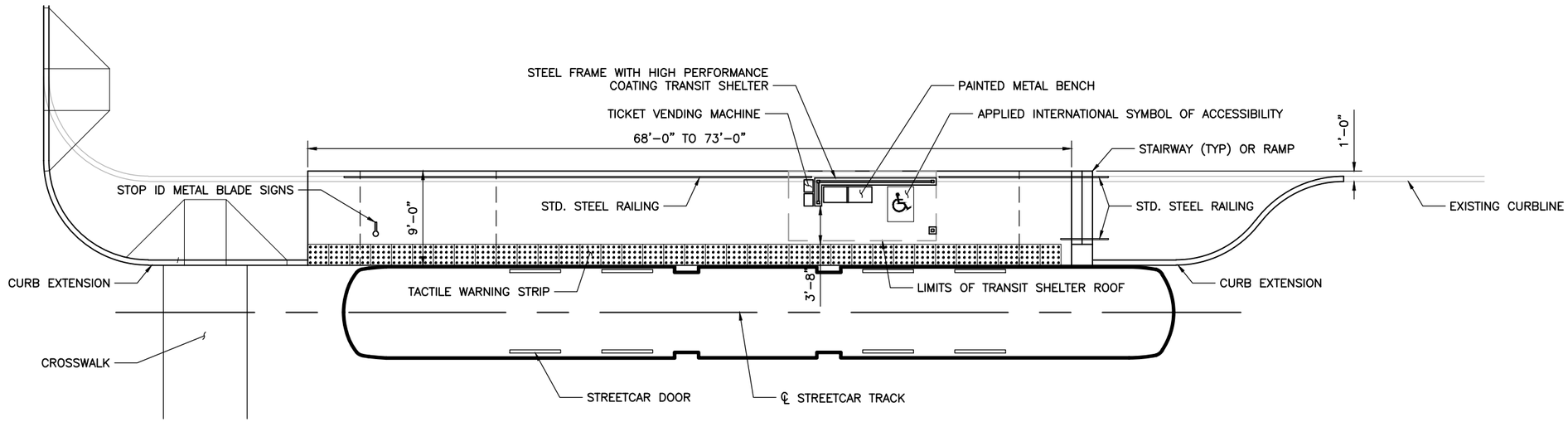

CURBSIDE STREETCAR STOP (9FT WIDE MIN)
LAYOUT PLAN

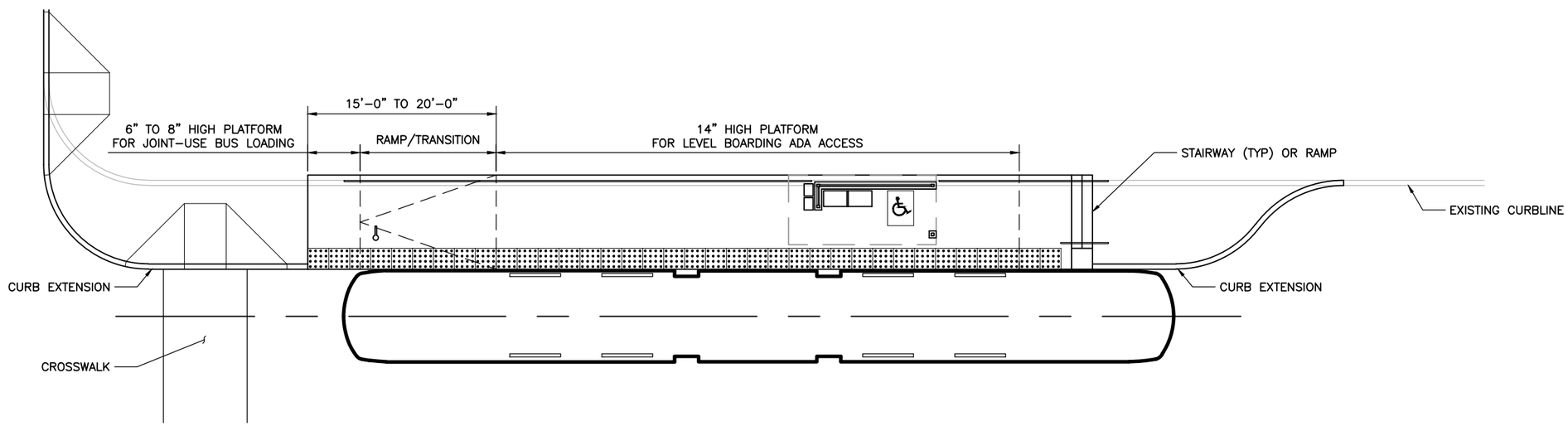

CURBSIDE STREETCAR STOP (9FT WIDE MIN)
CONCEPT GRADING DIAGRAM

O:\25698074 Nicollet Central Streetcar\5000 Technical\CADD\dwg\NCS Concept Design (Review Set).dwg, 11/24/2014 11:32:56 AM, Robin_Tiehema

URS

Minneapolis
City of Lakes

NICOLLET-CENTRAL MODERN STREETCAR
ENVIRONMENTAL ASSESSMENT
CURBSIDE STREETCAR STOP LAYOUT

Scale: 1"=1'-0"
Date: NOVEMBER 2014
Sheet No.: 16

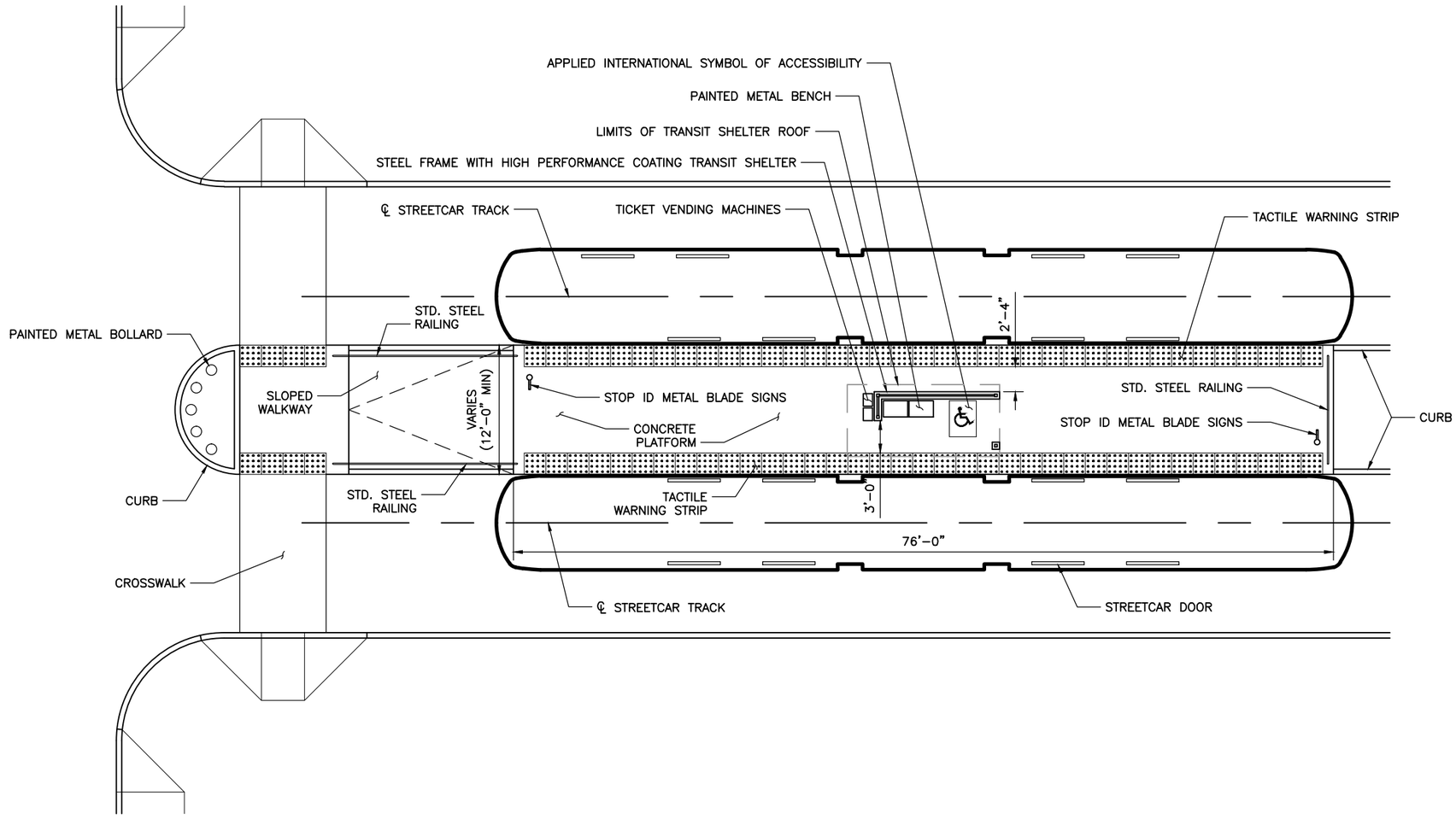

MEDIAN STREETCAR STOP (12FT WIDE MIN)

LAYOUT PLAN

O:\25698074 Nicollet Central Streetcar\5000 Technical\CADD\dwg\NCS Concept Design (Review Set).dwg, 11/24/2014 11:32:56 AM, Robin_Tiehhema

URS

Minneapolis City of Lakes

NICOLLET-CENTRAL MODERN STREETCAR
ENVIRONMENTAL ASSESSMENT
MEDIAN STREETCAR STOP LAYOUT

Scale: 1"=1'-0"

Date: NOVEMBER 2014

Sheet No.: 17

NICOLLET–CENTRAL MODERN STREETCAR

ENVIRONMENTAL ASSESSMENT
APPENDIX B
OMF SITE OPTIONS
OCTOBER 2014

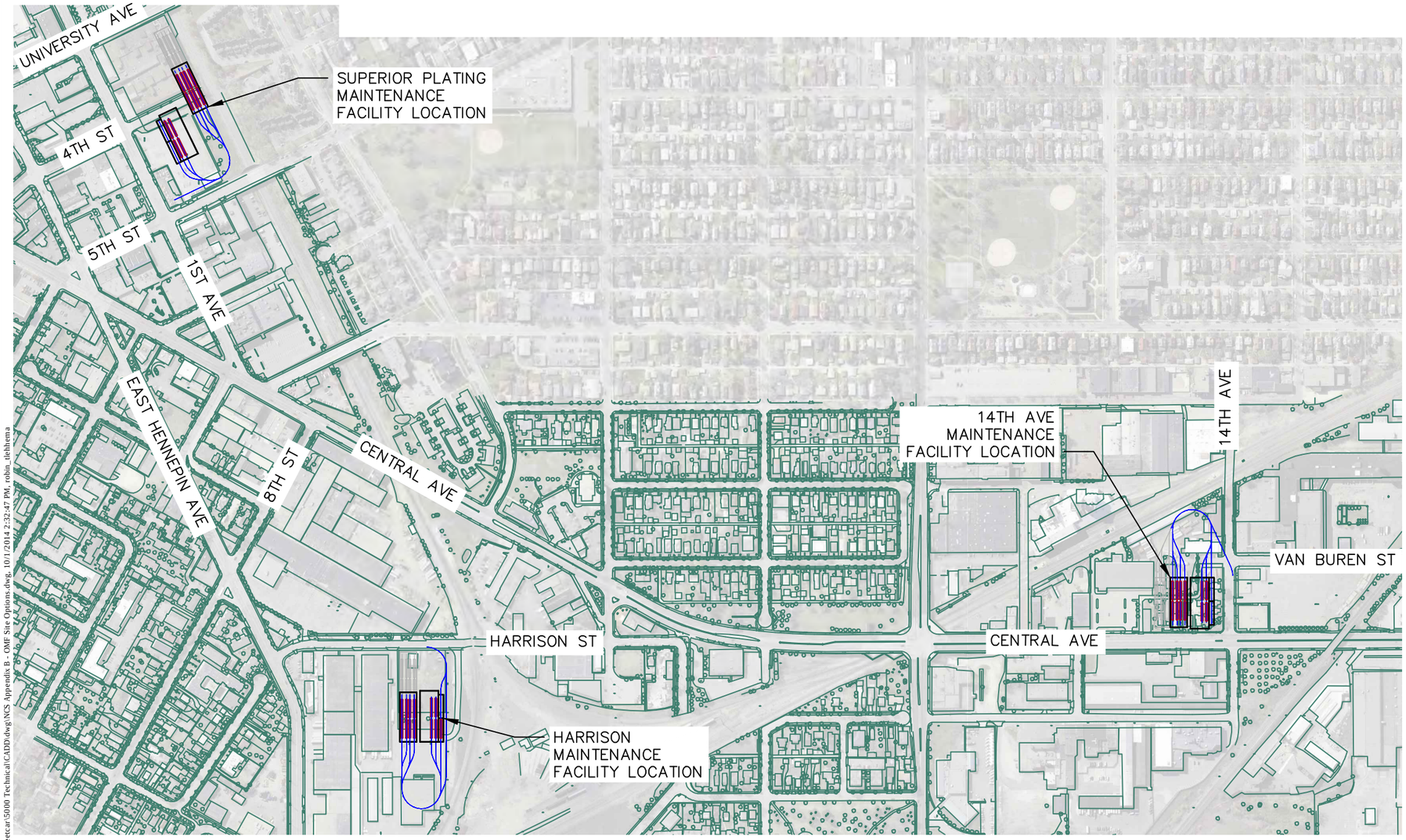

SHEET INDEX

SHEET NO.	TITLE
COVER	COVER SHEET
1	SUPERIOR PLATING SITE
2 THRU 5	14TH AVE SITE
6	TYPICAL SECTIONS

O:\25639074 Nicollet Central Streetcar\5000 Technical\CADD\dwg\NCS Appendix B - OMF Site Options.dwg, 10/1/2014 2:32:47 PM, robin_tiehlema

DRAFT

URS

Minneapolis City of Lakes

NICOLLET-CENTRAL MODERN STREETCAR
ENVIRONMENTAL ASSESSMENT
APPENDIX B
OMF SITE OPTIONS

500' 250' 0 500'
SCALE: 1" = 500'

Scale: 1"=500'
Date: OCTOBER 2014
Sheet No.: COVER

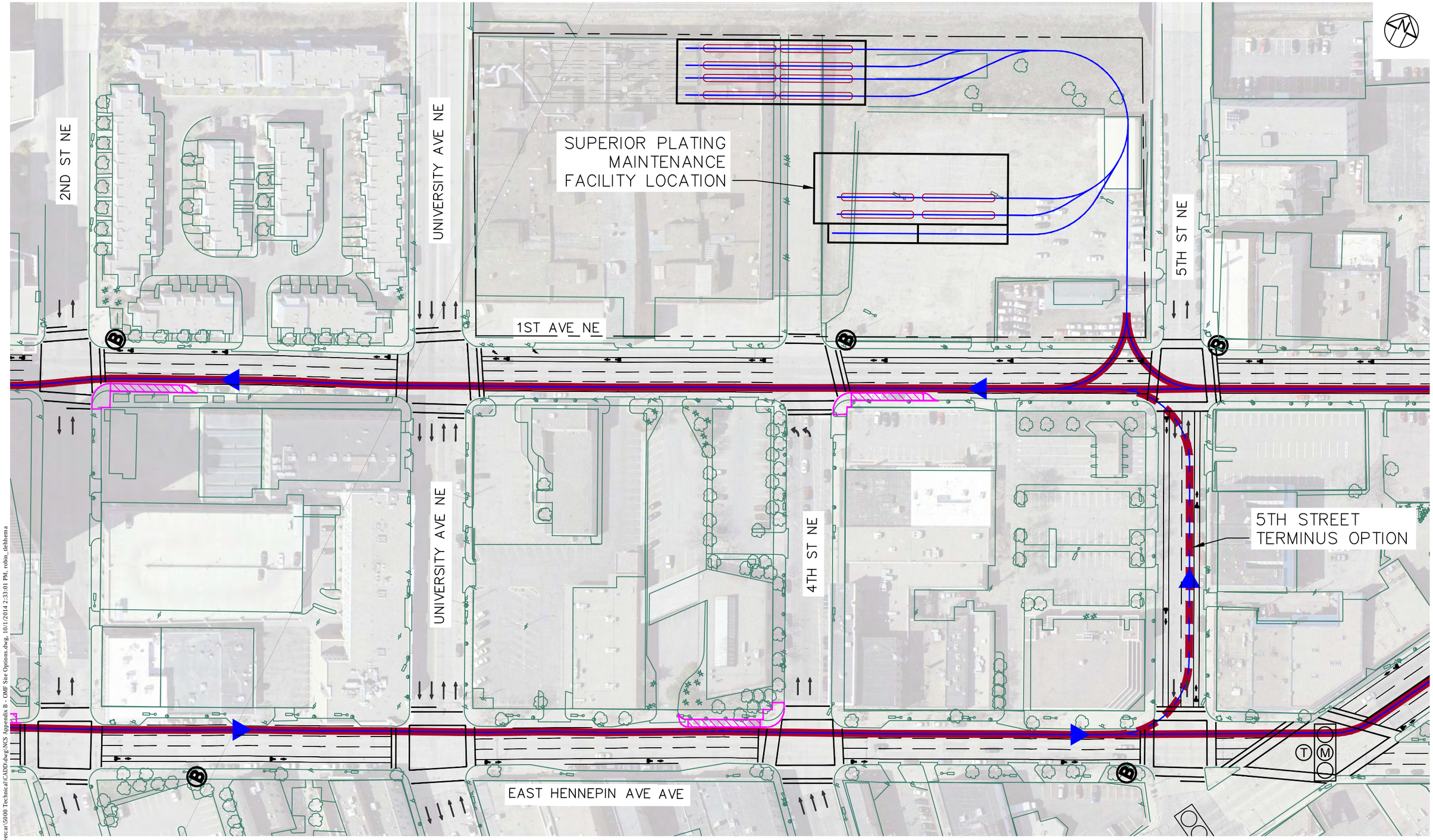

O:\25690074 Nicollet Central Streetcar\5000 Technical\CADD\dwg\NCS Appendix B - OMF Site Options.dwg, 10/1/2014 2:33:01 PM, robin_liehlema

DRAFT

URS

Minneapolis
City of Lakes

NICOLLET-CENTRAL MODERN STREETCAR
ENVIRONMENTAL ASSESSMENT
OMF SITE OPTIONS
SUPERIOR PLATING SITE

LEGEND:

- TRACK ALIGNMENT
- PROPOSED CURB WORK
- DIRECTION OF TRAVEL
- EXISTING TRAFFIC SIGNAL (NO IMPROVEMENTS)
- MODIFY EXISTING TRAFFIC SIGNAL
- PROPOSED TRAFFIC SIGNAL
- TRANSIT ONLY TRAFFIC SIGNAL PHASE
- EXISTING BUS STOP
- PROPOSED STREETCAR STOP

100' 50' 0 100'
SCALE: 1" = 100'

Scale: 1"=100'
Date: OCTOBER 2014
Sheet No.: 01

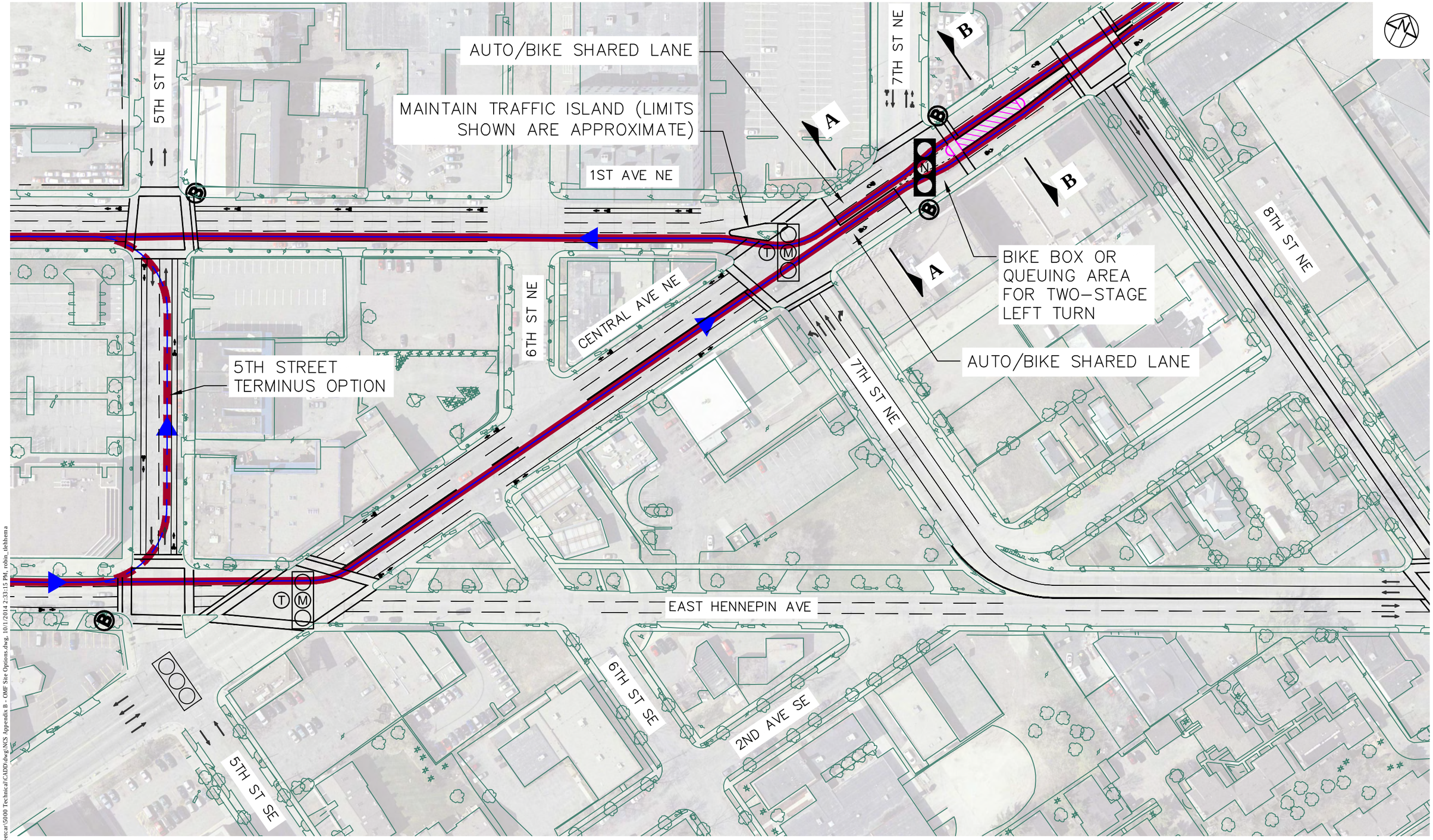

O:\25698074 Nicollet Central Streetcar\5000 Technical\CADD\dwg\NCS Appendix B - OMF Site Options.dwg, 10/1/2014 2:33:15 PM, robin_liebhema

DRAFT

URS

Minneapolis City of Lakes

NICOLLET-CENTRAL MODERN STREETCAR
ENVIRONMENTAL ASSESSMENT
OMF SITE OPTIONS
14TH AVE SITE

LEGEND:

- TRACK ALIGNMENT
- PROPOSED CURB WORK
- DIRECTION OF TRAVEL
- EXISTING TRAFFIC SIGNAL (NO IMPROVEMENTS)
- MODIFY EXISTING TRAFFIC SIGNAL
- PROPOSED TRAFFIC SIGNAL
- TRANSIT ONLY TRAFFIC SIGNAL PHASE
- EXISTING BUS STOP
- PROPOSED STREETCAR STOP

100' 50' 0 100'
SCALE: 1" = 100'

Scale: 1"=100'
Date: OCTOBER 2014
Sheet No.: 02

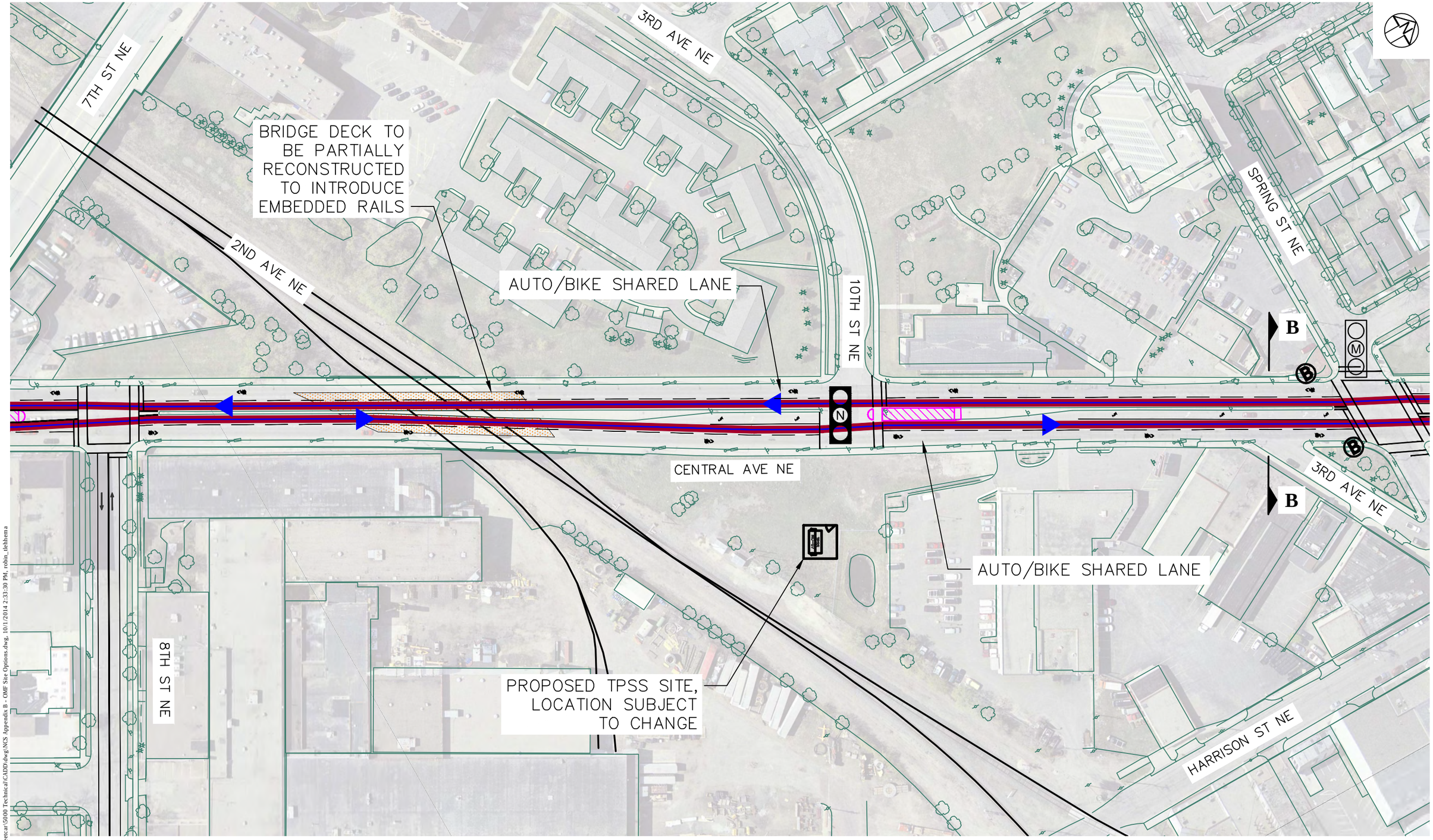

O:\25590074 Nicollet Central Streetcar\5000 Technical\CADD\dwg\NCS Appendix B - OMF Site Options.dwg, 10/1/2014 2:33:30 PM, robin_liehlema

DRAFT

URS

Minneapolis City of Lakes

NICOLLET-CENTRAL MODERN STREETCAR
ENVIRONMENTAL ASSESSMENT
OMF SITE OPTIONS
14TH AVE SITE

LEGEND:

- TRACK ALIGNMENT
- PROPOSED CURB WORK
- DIRECTION OF TRAVEL
- EXISTING TRAFFIC SIGNAL (NO IMPROVEMENTS)
- MODIFY EXISTING TRAFFIC SIGNAL
- PROPOSED TRAFFIC SIGNAL
- TRANSIT ONLY TRAFFIC SIGNAL PHASE
- EXISTING BUS STOP
- PROPOSED STREETCAR STOP

100' 50' 0 100'
SCALE: 1" = 100'

Scale: 1"=100'
Date: OCTOBER 2014
Sheet No.: 03

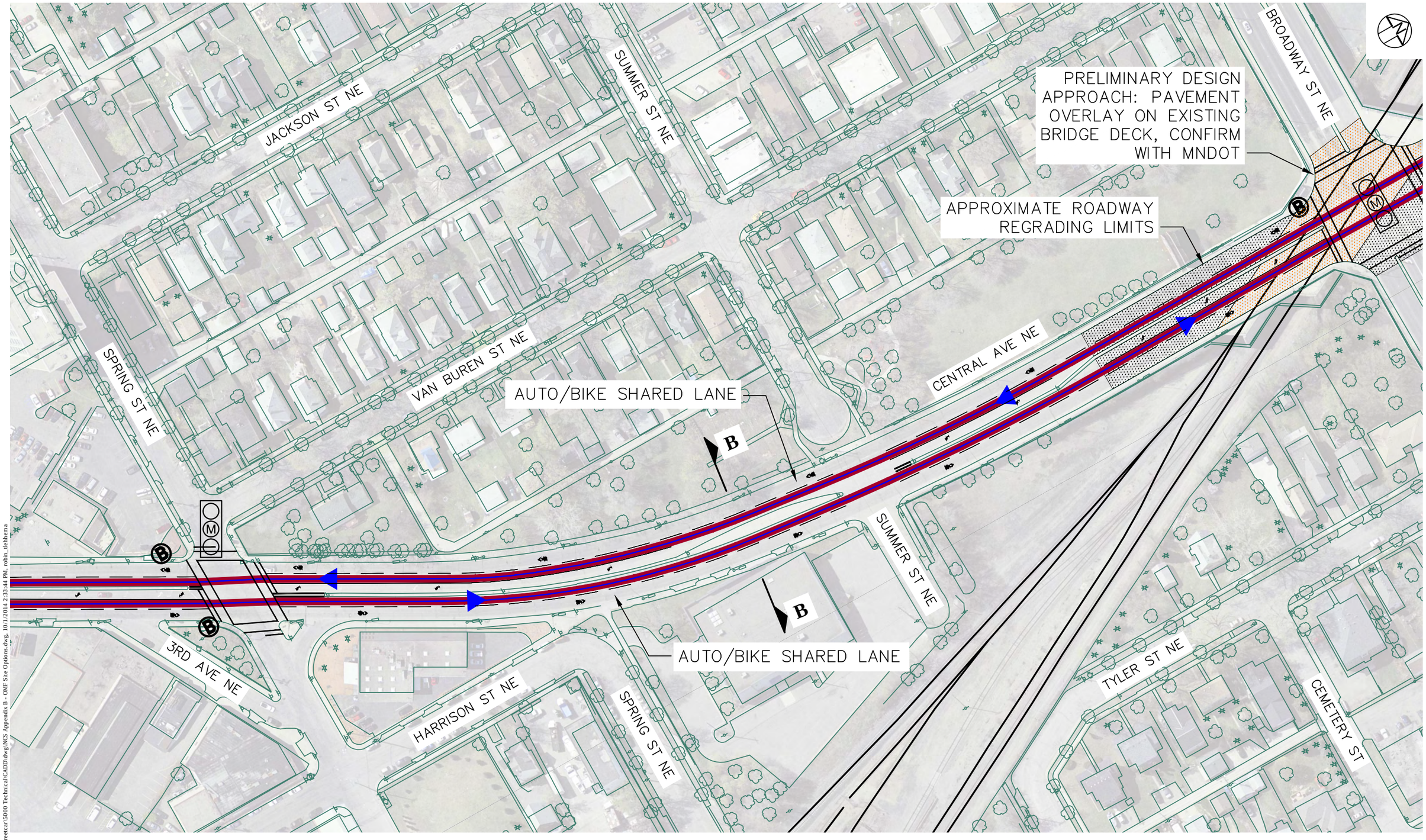

DRAFT

URS

Minneapolis City of Lakes

NICOLLET-CENTRAL MODERN STREETCAR
ENVIRONMENTAL ASSESSMENT
OMF SITE OPTIONS
14TH AVE SITE

LEGEND:

- TRACK ALIGNMENT
- PROPOSED CURB WORK
- DIRECTION OF TRAVEL
- EXISTING TRAFFIC SIGNAL (NO IMPROVEMENTS)
- MODIFY EXISTING TRAFFIC SIGNAL
- PROPOSED TRAFFIC SIGNAL
- TRANSIT ONLY TRAFFIC SIGNAL PHASE
- EXISTING BUS STOP
- PROPOSED STREETCAR STOP

100' 50' 0 100'
SCALE: 1" = 100'

Scale: 1"=100'
Date: OCTOBER 2014
Sheet No.: 04

O:\25698074 Nicollet Central Streetcar\5000 Technical\CADD\dwg\NCS Appendix B - OMF Site Options.dwg, 10/1/2014 2:33:44 PM, robin_tiehhema

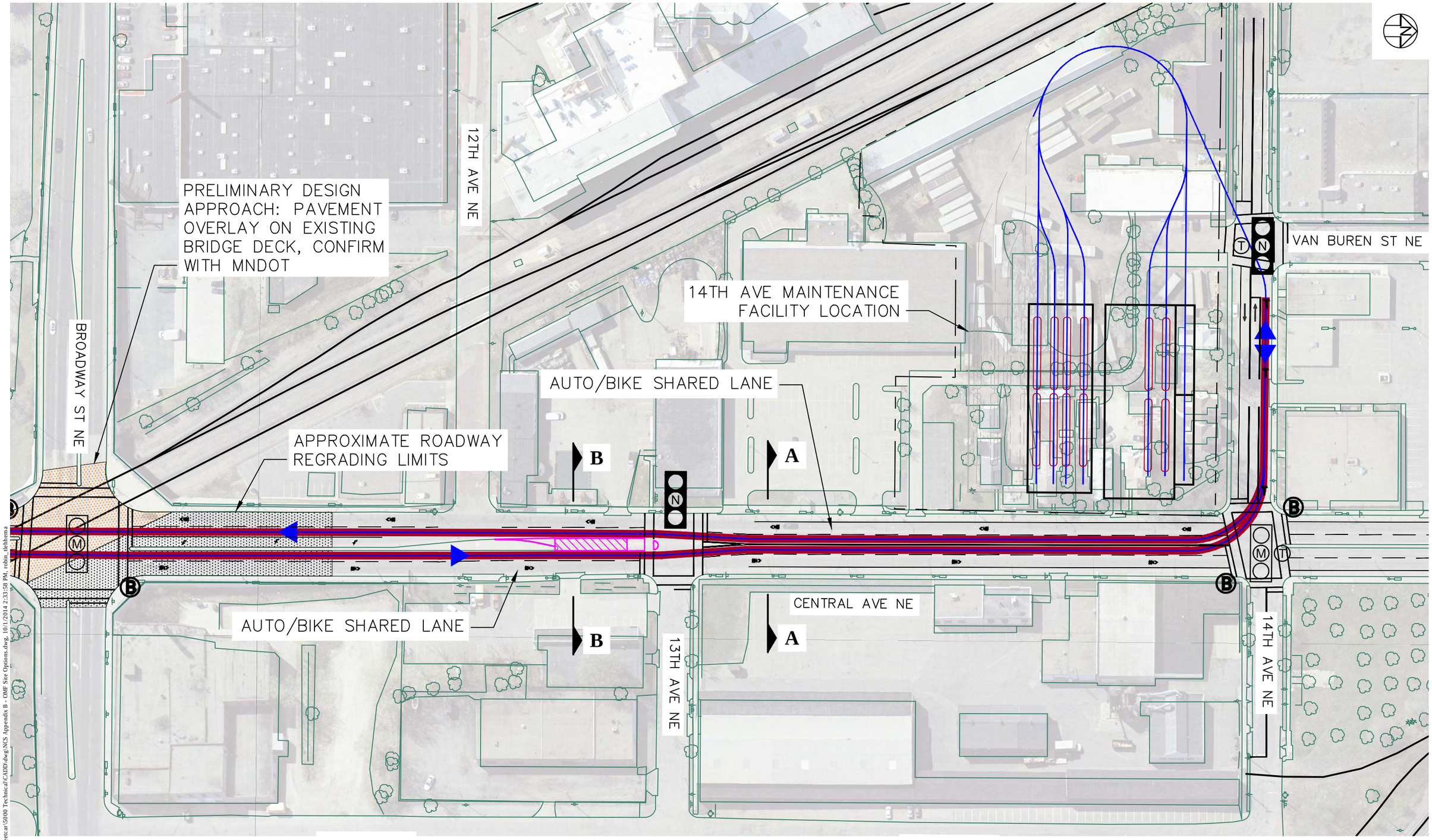

DRAFT

URS

Minneapolis City of Lakes

NICOLLET-CENTRAL MODERN STREETCAR
ENVIRONMENTAL ASSESSMENT
OMF SITE OPTIONS
14TH AVE SITE

LEGEND:

- TRACK ALIGNMENT
- PROPOSED CURB WORK
- DIRECTION OF TRAVEL
- EXISTING TRAFFIC SIGNAL (NO IMPROVEMENTS)
- MODIFY EXISTING TRAFFIC SIGNAL
- PROPOSED TRAFFIC SIGNAL
- TRANSIT ONLY TRAFFIC SIGNAL PHASE
- EXISTING BUS STOP
- PROPOSED STREETCAR STOP

100' 50' 0 100'
SCALE: 1" = 100'

Scale: 1"=100'
Date: OCTOBER 2014
Sheet No.: 05

O:\25690074 Nicollet Central Streetcar\5000 Technical\CADD\dwg\NCS Appendix B - OMF Site Options.dwg, 10/17/2014 2:33:58 PM, robin_liebhema

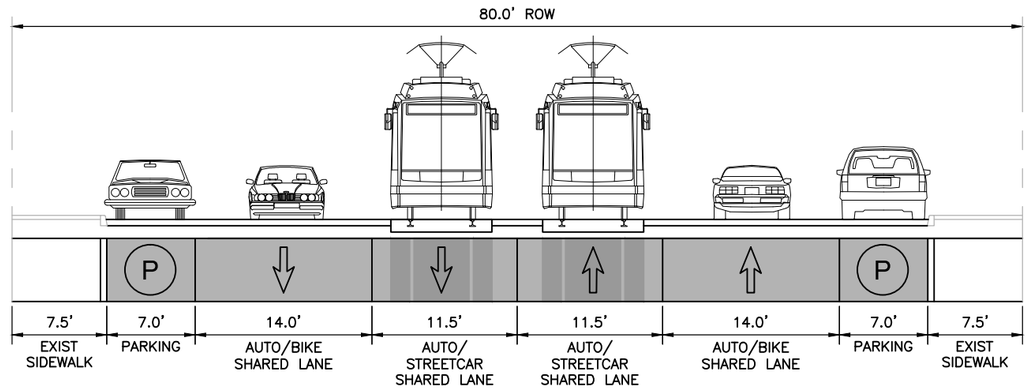

SECTION A-A

CENTRAL AVENUE (7TH ST TO 8TH ST & 13TH AVE TO 14TH AVE)

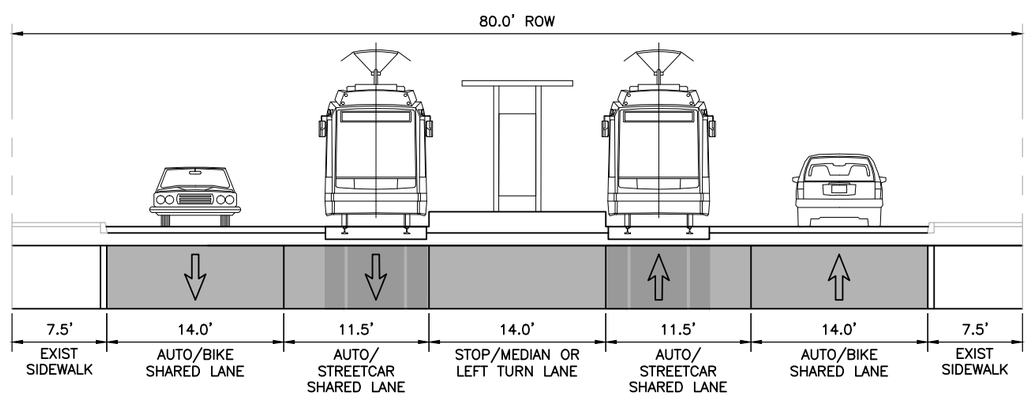

SECTION B-B

CENTRAL AVENUE (7TH ST TO 14TH AVE)

NOTE:
EXISTING CURB–TO–CURB WIDTH TO BE MAINTAINED

O:\25698074 Nicollet Central Streetcar\5000 Technical\CADD\dwg\NCS Appendix B - OMF Site Options.dwg, 10/1/2014 2:34:11 PM, robin_liehhema

DRAFT

URS

Minneapolis City of Lakes

NICOLLET-CENTRAL MODERN STREETCAR
ENVIRONMENTAL ASSESSMENT
OMF SITE OPTIONS
TYPICAL SECTIONS

Scale: 1"=12'
Date: OCTOBER 2014
Sheet No.: 06